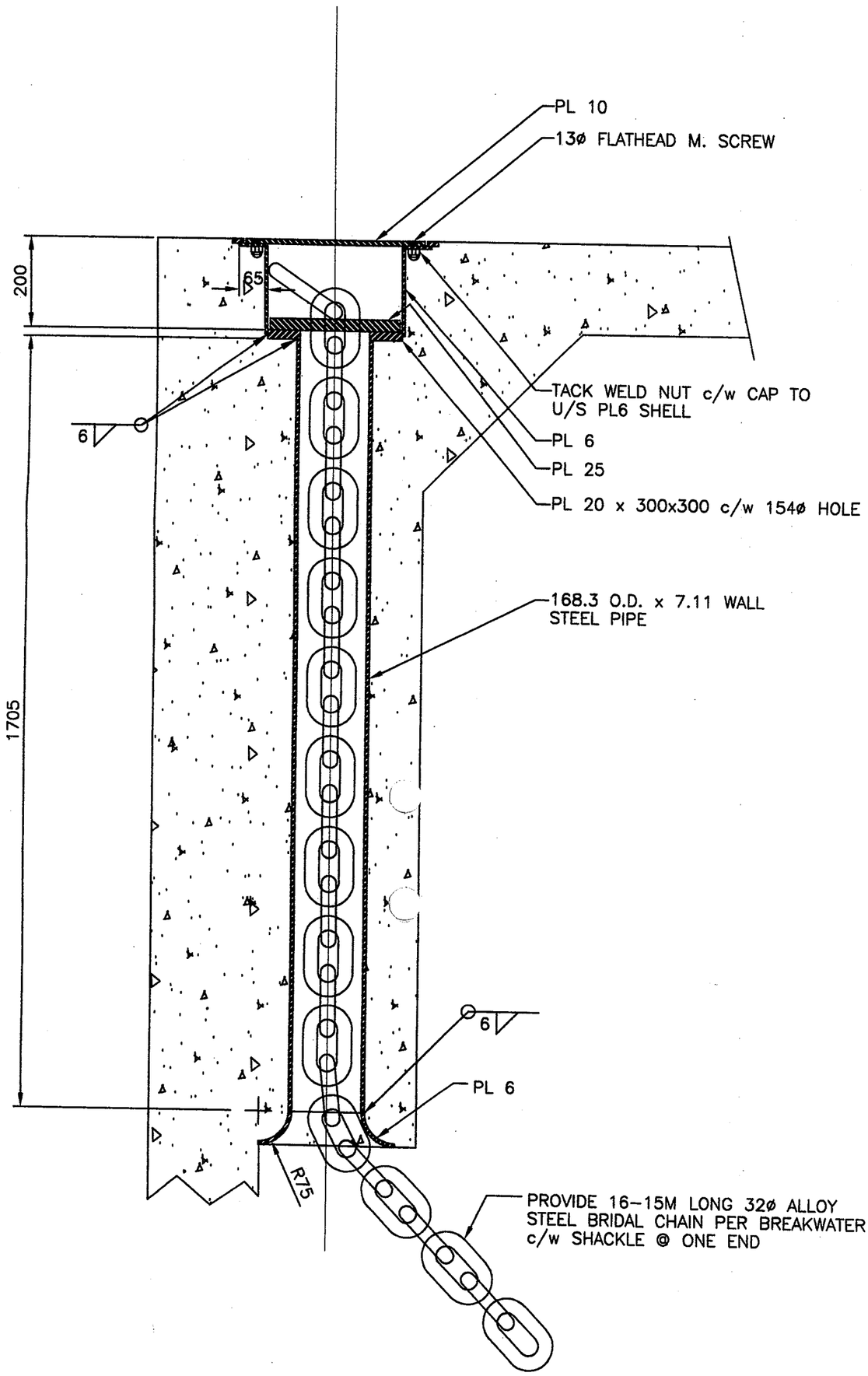


SECTION—MOORING HOLE 7/2

SCALE : 1:10

0mm 100 200 300 400 500 600 700 800 900 1000mm

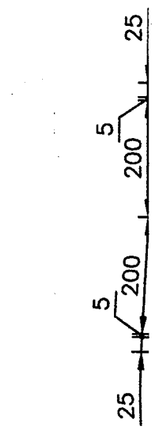


SEC

0mm 100 2

SEC

0mm 100 2

SEC

0mm 100 2

c