PROJECT MANUAL

ECCC ENFORCEMENT GARAGE

91782 Alaska Highway
Whitehorse, Yukon
2019

Issued for Tender
2019

KZA Project #: 1914

Environment and
Climate Change Canada
Environnement et
Changement climatique Canada

SECTION NUMBER	SECTION TITLE	NO. OF PAGES
DIVISION 00 – PROCUREMENT AND CONTRACTING REQUIREMENTS		
00 01 10	TABLE OF CONTENTS	4
00 31 32	GEOTECHNICAL REPORT	2
DIVISION 01 - GENERAL REQUIREMENTS		
01 11 55	GENERAL INSTRUCTIONS	14
01 26 63	CHANGE ORDER PROCEDURES	4
01 33 00	SUBMITTAL PROCEDURES	4
01 35 30	HEALTH AND SAFETY REQUIREMENTS	4
01 74 19	CONSTRUCTION WASTE MANAGEMENT	3
01 78 00	CLOSEOUT SUBMITTALS	6
01 91 19	FACILITY SHELL COMMISSIONING	6
DIVISION 03 – CONCRETE		
03 10 00	CONCRETE FORMING AND ACCESSORIES	3
03 20 00	CONCRETE REINFORCEMENT	3
03 30 00	CAST-IN-PLACE CONCRETE	6
DIVISION 06 – WOOD AND PLASTICS		
06 10 00	ROUGH CARPENTRY	5
06 17 53	SHOP-FABRICATED WOOD TRUSSES	5
DIVISION 07 - THERMAL AND MOISTURE PROTECTION		
07 01 20	GENERAL ENVELOPE REQUIREMENTS	2
07 21 13	BOARD INSULATION	3
07 21 16	BLANKET INSULATION	2
07 21 26	BLOWN INSULATION	3
07 25 00	WEATHER BARRIERS	5
07 46 19	STEEL SIDING	4
07 46 46	FIBER-CEMENT SIDING	4
07 61 00	SHEET METAL ROOFING	5
07 62 00	SHEET METAL FLASHING AND TRIM	5
07 72 53	SNOW GUARDS	3
07 92 00	JOINT SEALANTS	7
DIVISION 08 - OPENINGS		
08 11 13	METAL DOORS AND FRAMES	7
08 36 13	SECTIONAL OVERHEAD DOORS	7
08 53 13	VINYL WINDOWS	7
08 71 00	DOOR HARDWARE	8

DIVISION 09 - FINISHES

09 21 16	GYPSUM BOARD ASSEMBLIES	5
09 65 13	RESILIENT BASE	3
09 91 00	PAINTING	11

DIVISION 10 - SPECIALTIES

10 22 13	WIRE MESH PARTITIONS	3
10 44 00	FIRE PROTECTION SPECIALTIES	2

DIVISION 12 - FURNITURE

12 57 00	INDUSTRIAL FURNITURE	2

DIVISION 22 - PLUMBING

22 05 00	COMMON WORK RESULTS FOR PLUMBING	8
22 05 15	PLUMBING SPECIALTIES AND ACCESSORIES	6
22 10 10	PLUMBING PUMPS	3
22 11 16	DOMESTIC WATER PIPING	6
22 13 16.16	SANITARY WASTE AND VENT PIPING - PLASTIC	3
22 33 00	DOMESTIC WATER HEATERS	3
22 42 16	COMMERCIAL LAVATORIES AND SINKS	3

DIVISION 23 - HVAC

23 05 00	COMMON WORK RESULTS FOR HVAC	13
23 05 13	COMMON MOTOR REQUIREMENTS FOR HVAC EQUIPMENT	4
23 05 15	COMMON INSTALLATION REQUIREMENTS FOR HVAC PIPEWORK	5
23 05 29	HANGERS AND SUPPORTS FOR HVAC PIPING AND EQUIPMENT	6
23 05 48	VIBRATION AND SEISMIC CONTROLS FOR HVAC	4
23 05 93	TESTING, ADJUSTING AND BALANCING FOR HVAC	5
23 07 13	DUCT INSULATION	5
23 09 33	ELECTRIC AND ELECTRONIC CONTROL SYSTEM FOR HVAC	5
23 11 23	FACILITY GAS PIPING	4
23 23 00	REFRIGERANT PIPING	5
23 31 13.01	METAL DUCTS LOW PRESSURE TO 500 PA	4
23 33 00	AIR DUCT ACCESSORIES	4
23 33 14	DAMPERS BALANCING	2
23 33 15	DAMPERS - OPERATING	2
23 34 00	HVAC FANS	4
23 37 13	DIFFUSERS, REGISTERS AND GRILLES	2
23 37 20	LOUVRES, INTAKES AND VENTS	2
23 51 00	BREECHINGS, CHIMNEYS AND STACKS	3
23 72 00	AIR TO AIR ENERGY RECOVERY EQUIPMENT	9
23 81 40	AIR AND WATER SOURCE UNITARY HEAT PUMPS	6
23 82 39	UNIT HEATERS	3

DIVISION 26 - ELECTRICAL

26 05 01	COMMON WORK RESULTS ELECTRICAL	9
26 05 04	CONTRACTOR TESTING	3
26 05 08	ELECTRICAL MAINTENANCE MANUALS	6
26 05 21	WIRES AND CABLES 0 - 1000 V	2
26 05 25	IDENTIFICATION	3
26 05 28	GROUNDING	3
26 05 29	FASTENINGS AND SUPPORTS FOR ELECTRICAL SYSTEMS	2
26 05 31	JUNCTION, PULL BOXES AND CABINETS	2
26 05 32	OUTLET BOXES, CONDUIT BOXES AND FITTINGS	2
26 05 34	CONDUITS, CONDUIT FASTENINGS AND CONDUIT FITTINGS	3
26 05 48	SEISMIC RESTRAINTS FOR ELECTRICAL SYSTEMS	4
26 24 17	PANELBOARD - BREAKER TYPE	4
26 24 20	DISTRIBUTION SYSTEM	3
26 27 26	WIRING DEVICES	3
26 28 21	MOULDED CASE CIRCUIT BREAKERS	2
26 28 23	DISCONNECT SWITCHES FUSED AND NON-FUSED	2
26 42 10	ELECTRICAL HEATING CABLES PIPE TRACING	3
26 50 00	LIGHTING	4
26 52 01	UNIT EQUIPMENT FOR EMERGENCY LIGHTING	4
26 79 00	DEMONSTRATION AND TRAINING	2

DIVISION 31 - EARTHWORK

31 05 13	FILL MATERIALS	2
31 20 10	EARTHWORK GENERAL REQUIREMENTS	4
31 23 10	SITE EXCAVATING, FILLING AND GRADING	2
31 23 38	TRENCH EXCAVATING AND BACKFILLING	2

DIVISION 32 – EXTERIOR IMPROVEMENTS

32 11 16	GRANULAR BASE	2
32 12 16	ASPHALT CONCRETE PAVEMENT	4
32 13 13	CONCRETE PAVING, CURBS AND GUTTERS	5
32 17 23	PAVEMENT MARKINGS	2

DIVISION 33 – UTILITIES

33 65 16	WATER UTILITY DISTRIBUTION PIPING	10
33 65 26	SANITARY UTILITY SEWERAGE PIPING	7

APPENDICES

Appendix A	GEOTECHNICAL REPORT	21

DRAWINGS

A000	COVER PAGE

A001	LEGEND, NOTES & ASSEMBLIES
A101	SITE & GRADING PLAN
A201	FLOOR & ROOF PLANS
A501	ELEVATIONS, DOOR & WINDOW SCHEDULES
A601	BUILDING & WALL SECTIONS, DETAILS
A701	DETAILS
A702	DOOR & WINDOW DETAILS
S101	GENERAL NOTES
S102	SECTIONS AND DETAILS
S103	SECTIONS AND DETAILS
S104	FOUNDATION PLAN
S105	ROOF FRAMING PLAN
M1	SITE PLAN
M2	PLUMBING PLAN
M3	HVAC PLAN
M4	DETAILS
E1	SITE PLAN
E2	LIGHTING LAYOUT AND DETAILS
E3	POWER LAYOUT AND DETAILS
E4	SCHEDULE AND DETAILS

END OF SECTION

Part 1 General

1.1 DEFINITIONS

.1 Information Documents means information of any type and in any form, related to the Project and identified in this Section as such.

1.2 STATUS OF INFORMATION DOCUMENTS

.1 Information Documents, or any part thereof, are not part of the Contract unless specifically incorporated into Contract Document by means of copying, transcribing, or referencing.

1.3 USE OF AND RELIANCE UPON INFORMATION DOCUMENTS

.1 Information Documents are made available for the purpose of providing information available to the Owner.

.2 Information Documents shall not be considered a representation or warranty that information contained therein is accurate, complete or appropriate.

.3 Contractor to interpret and draw its own conclusions about Information Documents and is encouraged to obtain specialist advice with respect thereto. The Engineer assumes no responsibility for such interpretations and conclusions.

.4 Information contained in Information Documents may be time sensitive and dates shall be considered when interpreting Information Documents.

.5 Contractor may rely upon the data contained in Information Documents or parts thereof, which are specifically incorporated into Contract Documents by means of copying, transcribing or referencing, but shall draw his own conclusions from such data and shall not rely on opinions or interpretations contained therein.

1.4 INFORMATION DOCUMENTS

.1 Geotechnical Report: A copy of a detailed geotechnical investigation report with respect to the building site; prepared by EBA, A Tetra Tech Company Inc. identified as follows has been appended hereto;

.1 Geotechnical Evaluation – Desktop Study, Proposed Canadian Wildlife Storage Garage, Whitehorse, YT.

.2 This report records properties of the soils and recommendations for the design of the foundations, prepared primarily for the use of the Departmental Representative. The recommendations given shall not be construed as a requirement of this contract unless also contained in the Contract Documents.

.3 The report, by its nature, cannot reveal all conditions that exist or can occur on the site. Should subsurface conditions be found to vary substantially from the report, changes in the design and construction of foundations will be made, with resulting credits or expenditures to the contract price accruing to the owner.

1.5 GEOTECHNICAL REPORTS

.1 Appendix A:

.1 Geotechnical Evaluation – Desktop Study, Proposed Canadian Wildlife Storage Garage, Whitehorse, YT (by EBA, A Tetra Tech Company, W14101527, 21 Pages), March 17, 2011.

Part 2 Products

2.1 NOT USED

.1 Not Used.

Part 3 Execution

3.1 NOT USED

.1 Not Used.

END OF SECTION

Part 1 General

1.1 WORK COVERED BY CONTRACT DOCUMENTS

.1 Work of this Contract comprises the construction of a new 211 m^2 storage garage at the Environment and Climate Change Canada Compound, located at 91782 Alaska Highway, Whitehorse, Yukon as described in the attached drawings and specifications. Work includes, but is not limited to the following:

.1 Demolition of existing fence, and clearing and grubbing.

.2 Completion of all site works, including trenching, excavation, backfill, asphalt and concrete paving, compacted gravel areas, sewer, water and electrical services.

.3 Construction of new wood framed storage garage.

.4 All architectural, structural, mechanical, electrical, and civil work shown on drawings and all work within the extent of the contract as shown on Drawing A101.

.5 Independent building envelope airtightness testing.

.6 O&M manuals and as-built drawings.

.7 Co-ordination of sub-contractors.

.8 Liaison with Owner and Departmental Representative.

.9 Securing and paying for all fees and permits as required by the Authorities Having Jurisdiction as required to complete the Work.

.10 Mobilization and demobilization costs.

.11 Temporary heating and hoarding costs.

.12 Construction waste management with a target of 75% waste diversion.

.13 Dumpster, construction fencing, and coordination of all rental costs (including all heavy and light equipment).

.14 Coordination and management of all staging areas.

.15 Site cleanliness, including progressive cleaning.

.16 The contractor shall refer to the following reports for all geotechnical aspects of construction including, but not limited to, excavation, dewatering, shoring, underpinning, bearing capacity, bearing surface protection, backfilling, fill materials, subgrade protection, etc.:

.1 Geotechnical Evaluation – Desktop Study, Proposed Canadian Wildlife Storage Garage, Whitehorse, YT (by EBA, A Tetra Tech Company, W14101527, 21 Pages), March 17, 2011.

1.2 WORK BY OTHERS

.1 The work on this contract includes coordination and cooperation with other contractors and building personnel working within the Environment and Climate Change Canada Compound. If any part of work under this Contract depends for its proper execution or result upon work of another Contractor, report promptly to Departmental

Representative, in writing, any defects which may interfere with proper execution of Work.

1.3 COMPLETION DATE

.1 The Contractor must achieve Substantial Performance within 12 months of Contract award.

1.4 WORK SEQUENCE

.1 Construct Work in stages to accommodate the public and the Owner's continued use of premises during construction. Do not close off public usage of facilities until use of one stage of Work will provide alternate usage.

.2 Maintain fire access/control.

1.5 WORK SCHEDULE

.1 On award of contract submit a critical path method (CPM) gantt chart construction schedule for the work, indicating anticipated progress stages within time of completion.

.2 Minimum stages include:

.1 Mobilization,
.2 Shop drawings, Product data MSDS sheets and samples submittal,
.3 Order and delivery of major components and equipment,
.4 Major approvals stages,
.5 Interim and final inspection times,
.6 Commissioning timeframes,
.7 Final deficiency corrections,
.8 Training,
.9 Demobilization,
.10 Close-out manuals submission.

.3 When schedule has been reviewed and approved by the Departmental Representative take necessary measures to complete work within scheduled times. Do not change schedule without written approvals from the Departmental Representative.

1.6 CONTRACTOR USE OF PREMISES

.1 Limit use of premises for Work, for storage, and for access, to allow:

.1 Owner occupancy.
.2 Public usage.

.2 Co-ordinate use of premises under direction of Departmental Representative.

.3 Do not unreasonably encumber site, with material or equipment.

.4 Execute the work with the least possible interference or disturbance to the normal use of the exiting premises. Make arrangements with the Owner to facilitate the work as stated.

.5 Maintain existing services to the building and provide for personnel and vehicle access.

.6 Maintain a solid or chain link, or construction security fence c/w suitable locks around work and storage areas at all times.

.7 Where security is reduced by the work, provide temporary means to maintain security.

.8 Contractor to supply their own site trailer (if required) phone, fax, and storage box. No storage will be provided within the building. Accommodation will be made for limited on-site storage at the discretion of the Departmental Representative in area designated by the Departmental Representative.

.9 Provide sanitary facilities for own work force in accordance with governing regulations and ordinances. Post notices and take precautions as required by local health authorities. Keep area and premises in sanitary condition.

.10 Obtain and pay for use of additional storage or work areas needed for operations under this Contract.

.11 Remove or alter existing work to prevent injury or damage to portions of existing work which remain.

.12 Repair or replace portions of existing work which have been altered during construction operations to match existing or adjoining work, as directed by Departmental Representative.

.13 At completion of operations condition of existing work: equal to or better than that which existed before new work started.

1.7 UTILITIES

.1 Water supply is available on site and will be provided for construction usage at no cost. Facility Supervisor reserves the right to limit volume of water utilized.

.2 Existing electrical services to a maximum of 15 kVA required for the work may be used by the Contractor without charge. Ensure capacity is adequate prior to connecting and imposing additional loads. Connect and disconnect at own expense and responsibility.

1.8 OWNER OCCUPANCY

.1 Owner will occupy adjacent premises during entire construction period for execution of normal operations.

.2 Co-operate with Owner in scheduling operations to minimize conflict and to facilitate Owner usage.

1.9 ALTERATIONS, ADDITIONS OR REPAIRS TO EXISTING BUILDING

.1 Execute work with least possible interference or disturbance to occupants, public and normal use of premises. Arrange with Departmental Representative to facilitate execution of work.

.2 Cutting and Patching

.1 Cut existing surfaces as required to accommodate new work. Openings shall be neatly cut and dimensioned to fit electrical conduits, mechanical pipes and/or ductwork passing through the surfaces. Obtain the Departmental Representative's approval before cutting into structure. Cutting torches shall not be permitted.

.2 Patch and make good cut on both sides of surfaces, damaged or disturbed to match or better existing conditions to the satisfaction of the Departmental Representative.

.3 The Contractor shall patch and make good existing openings when Contractor utilizes the existing openings for his work.

.3 Demolition

.1 Except if expressly stated otherwise, materials indicated for removal, become the Contractor's property and shall be promptly taken from the site.

1.10 EXISTING SERVICES

.1 Where work involves breaking into or connecting to existing services, carry out work at times directed by the Departmental Representative. Connection to existing services shall be after hours and/or on weekends.

.2 Before commencing Work, establish location and extent of service lines in area of Work and notify the Departmental Representative of findings.

.3 Submit schedule to and obtain approval from the Departmental Representative for any shutdown or closure of active service or Facility. Adhere to approved schedule and provide notice to affected parties. Do not alter schedule without prior written consent of the Departmental Representative.

.4 Give the Departmental Representative 48 hours notice related to each necessary interruption of any mechanical or electrical service throughout the course of the work. Obtain written authorization from the Departmental Representative prior to any interruption. Keep duration of those interruptions to a minimum.

.5 Where unknown services are encountered, immediately advise Departmental Representative and confirm findings in writing.

1.11 CONTRACT DOCUMENTS

.1 The Contract documents, drawings and specifications are intended to complement each other, and to provide for and include everything necessary for the completion of the work.

.2 Drawings are, in general, diagrammatic and are intended to indicate the scope and general arrangement of the work.

1.12 SPECIFICATIONS

.1 The specifications are subdivided in accordance with the current 6-digit National Master Specifications System.

.2 A division may consist of the Work of more than 1 subcontractor. Responsibility for determining which subcontractor provides the labour, material, equipment and services required to complete the Work rests solely with the Contractor.

1.13 DOCUMENTS REQUIRED

.1 Maintain at job site, one copy each document as follows:

.1 Contract Drawings.
.2 Contract Specifications.
.3 Addenda.
.4 Reviewed Shop Drawings and samples.
.5 List of Outstanding Shop Drawings.
.6 Change Orders.
.7 Other Modifications to Contract.
.8 Field Test Reports.
.9 Copy of Approved Work Schedule.
.10 Health and Safety Plan and Other Safety Related Documents.
.11 Manufacturers' installation and application instructions
.12 One set of record drawings and specifications for "as-built" purposes
.13 National Building Code of Canada 2015
.14 Current construction standards of workmanship listed in technical Sections
.15 Other documents as specified.

1.14 HOURS OF WORK

.1 Work shall be carried out Monday to Friday from 08:00hrs to 17:00hrs. Earlier or later working hours available upon approval from Owner.

.2 All noise generating or strong-smelling work to be completed must be coordinated with the Owner or arrangements made for working outside normal working hours.

.3 The Contractor shall not permit his personnel to work alone on this project when the following activities are undertaken:

.1 Work assessment determined that the potential health & safety risk is high;
.2 Work requiring entry into or work within a Confined Space;
.3 Work requiring use of fall arrest equipment;
.4 Work on scaffolding;

.5 Work requiring supplied air respirators or similar equipment;

.6 Work involving cranes or hoisting;

.7 Work or work situations identified by the Departmental Representative.

1.15 BUILDING SMOKING ENVIRONMENT

.1 Smoking is prohibited in the building and on the roofs. Smoking is prohibited within a 10 metre radius of doors, windows and air intakes of existing buildings. Obey smoking restrictions on building property as directed by the Departmental Representative.

1.16 SCHEDULE OF VALUES

.1 Before submitting first progress claim, submit Schedule of Values to Departmental Representative. After approval, it will be used as the basis for progress payments.

1.17 SUBMITTALS

.1 Refer to Section 01 33 00 – Submittal Procedures.

.2 Shop Drawings

.1 Provide an electronic copy of the shop drawings as listed in the specifications and/or drawings to the Departmental Representative prior to ordering materials. Shop drawings to illustrate details of portion of work specific to the project requirements. Information to clearly indicate the items to be reviewed. Generic drawings and faxed copies are not acceptable.

.2 Allow ten (10) working days for Departmental Representative's review of each shop drawing submission.

.3 Certificates

.1 Submit a completed Notice of Project Form to the Yukon Workers' Compensation Health and Safety Board as required by the notification requirements under the Regulations for Construction Projects made pursuant to the Occupational Health & Safety Regulations. Provide copy to the Departmental Representative.

.2 Prior to commencing the work, throughout the total performance of the work when requesting payments and prior to receiving final payment, the Contractor shall provide evidence of good standing with Yukon Workers' Compensation Health and Safety Board.

1.18 MOCK-UPS

.1 Prepare mock-ups for Work specifically requested in specifications. Include for Work of Sections required to provide mock-ups.

.2 Construct in locations acceptable to Departmental Representative.

.3 Prepare mock-ups for Departmental Representative's review with reasonable promptness and in orderly sequence, to not cause delays in Work.

.4 Failure to prepare mock-ups in ample time is not considered sufficient reason for extension of Contract Time and no claim for extension by reason of such default will be allowed.

.5 Mock-ups may remain as part of Work.

1.19 CONSTRUCTION SAFETY MEASURES

.1 Observe and enforce construction safety measures required by the Canada Labour Code Part II, Occupational Health and Safety, Yukon Occupational Health and Safety Act and municipal statutes and authorities and site-specific Health and Safety Policies and Directives

.2 In the event of conflict between any provisions of above authorities, the most stringent will apply.

.3 Provide and maintain guardrails, fences, barricades, lights, signs and other devices required for protection of workmen and public in accordance with the requirements of the Canada Labour Code Part II, Occupational Health and Safety, Yukon Occupational Health and Safety Act and Regulations for Construction Projects and Local by-laws. All signs shall be bilingual or CSA universal pictograms.

.4 Ensure the safety of building personnel at all times when performing work.

.5 Refer to Specifications Section 01 35 30 - Health and Safety for additional requirements

1.20 FIRE SAFETY REQUIREMENTS

.1 Comply with the National Building Code of Canada for fire safety in construction and the National Fire Code of Canada for fire prevention, fire fighting and life safety in building in use.

.2 Comply with Human Resources Development Canada (HRDC), Fire Commissioner of Canada (FCC) Standards;

.1 No. 301: Standard for Construction Operations

.2 No. 302: Standard for Welding and Cutting

.3 No. 374: Fire Protection Standard for General Storage (Indoor and Outdoor)

.4 Available from Fire Protection Engineering Services, Labour program, HRDC or following internet site: http://www.hrsdc.gc.ca/eng/labour/fire_protection/policies_standards/index.shtml

.5 Retains all fire safety documents on site.

.3 Refer to Section 01 35 30 - Health and Safety for further information on Health and Safety

1.21 POWDER ACTUATED DEVICES

.1 Do not employ powder-actuated guns using explosives, unless expressly permitted by the Departmental Representative.

.2 If permitted:

.1 Comply with requirements of CAN3-Z166.2-M85 (Use and Handling of Powder Actuated Tools).

.2 Obtain approval with onsite maintenance staff to determine acceptable time of day usage.

.3 Powder-actuated devices may be used before 08h00 and after 17h00 of accepted by onsite maintenance staff.

1.22 REGULATORY REQUIREMENTS

.1 The following codes and Standards are in place for work under this contract. The latest edition applicable at the time to be utilized.

.1 National Building Code of Canada (NBC) 2015

.2 National Fire Code of Canada (NFC) 2015.

.3 Canadian Electric Code.

.4 National Plumbing Code of Canada (NPC) 2015.

.5 Canada Labour Code Part II and Federal Occupational Health and Safety Policies

.6 Construction Standards and/or any other Code or bylaw of local application.

.2 Comply with applicable local bylaws, rules and regulations enforced at the location concerned.

.3 Meet or exceed requirements of Contract documents, specified standards, codes and referenced documents.

.4 In any case of conflict or discrepancy, the most stringent requirements shall apply

1.23 FEES

.1 Obtain and pay for – Building Permit as required by the City of Whitehorse, Certificates, Licenses and other permits required by regulatory municipal, provincial or federal authorities to complete the work.

.2 Provide inspection authorities with plans and information required for issue of acceptance certificates.

.3 Furnish inspection certificates in evidence that the work installed conforms to the requirements of the authority having jurisdiction.

1.24 HAZARDOUS MATERIALS

.1 Comply with the requirements of the Workplace Hazardous Materials Information System (WHMIS) regarding use, handling, storage, and disposal of hazardous materials:

and regarding labeling and the provision of Material Safety Data Sheets (MSDS) acceptable to Human Resources Development Canada, Labour Program.

1.25 WORKMANSHIP

.1 Workmanship shall be the best quality, executed by workers experienced and skilled in the respective duties for which they are employed. Immediately notify the Departmental Representative, if required, if work is such as to make it impractical to produce required results.

.2 Do not employ any person unfit or unskilled in their required duties. The Departmental Representative reserves the right to require the dismissal from the site, workers deemed incompetent, careless, insubordinate or otherwise objectionable.

.3 The Work as covered by the Contract Documents documents is intended to comply exactly with the latest rules and regulations of the inspection authorities, and these rules are to be considered an integral part of the Contract Documents. In case of conflict, any ruling by the Inspection Authority shall be final. All changes and alterations to the Contractor's work required by an authorized inspector or any authority having jurisdiction shall be carried out at the expense of the Contractor.

.4 Decisions as to the quality or fitness of workmanship in cases of dispute rest solely with the Departmental Representative, whose decision is final.

1.26 EQUIPMENT

.1 Provide and maintain equipment such as temporary stairs, ladders, ramps, scaffolds, swing stages, runways, chutes and the like, as required for execution of work

.2 Provide and maintain conveying equipment such as cranes, hoists, derricks and the like, as required for execution of work.

.3 Assume complete responsibility for construction strength, placing, anchoring and operation of derricks, cranes, hoists and other mechanical contrivances used for work; and ensure that loads carried thereon can be safely supported and be free from accidents to all persons.

.4 Comply with all governing safety regulations in force at the time of construction.

.5 Remove immediately such equipment when not required for work.

.6 Provide and maintain, on site, suitable fire extinguishers in sufficient quantities, as required by the Safety Code.

1.27 HOISTING

.1 All crane operations are restricted to the following:

.1 All craning of materials and equipment must be done outside normal building operating hours, ensure interior areas below are kept unoccupied.

1.28 LOADING

.1 Take precautions to prevent the overloading of any part of the structure during the progress of the work. Make good, at no expense to Owner, any damage resulting from such overloading.

1.29 SIGNAGE

.1 No advertising and/or posting of company signs shall be permitted.

.2 Provide common-use signs as related to traffic control, information, instruction, health and safety, use of equipment, public safety devices, in both official languages or by the use of commonly understood graphic symbols to the Departmental Representative's approval.

1.30 CONTRACTOR PROJECT SUPERINTENDENT

.1 The Contractor shall, upon award of contract, designate a Project Superintendent. The Contractor shall provide the name, cellular phone number to the Departmental Representative at the preconstruction meeting.

.2 The Project Superintendent shall have full responsibility for the project and shall be authorized to accept and act upon any notice or direction provided by the Departmental Representative. Project Superintendent shall be available on site at all times that work is being performed under this contract.

.3 Supervise and direct all persons engaged in the work, including all tradesmen and suppliers. Become familiar with the requirements of each trade. Coordinate delivery and work operations. Examine the work of all trades during work operations to ensure compliance with the contract requirements. Expedite all work to maintain the contract schedule.

.4 Cooperate with all other contractors working on site in parallel or related projects.

.5 Attend coordination and project meetings at the direction of the Departmental Representative.

1.31 PRODUCT HANDLING AND STORAGE

.1 Deliver materials in original and unopened containers or wrappings with Manufacturers' seals and labels intact and legible.

.2 Deliver materials in sufficient quantity to allow continuity of the work. Do not encumber site with unnecessary materials.

.3 All unused materials at the end of any working day shall be properly protected from damage.

.4 All materials, equipment, etc. to be handled and stored as not to interfere with the operation of the building.

.5 All material and equipment to be new unless specified otherwise.

.6 Contractors who use controlled products must ensure that their workers are properly trained in the safe use and handling of such products in compliance with the Workplace Hazardous Materials Information System (WHMIS).

.7 Comply with all requirements with respect to Controlled products labeling and Material Safety Data Sheets (MSDS) according to the requirements of WHMIS and the Hazardous Products Act.

1.32 PRODUCT AVAILABILITY

.1 Upon award of contract immediately review product delivery requirements and advise the design authority of any foreseeable delays.

.2 In the event of failure to notify the Departmental Representative at commencement of the work, the Departmental Representative reserves the right to require the supply of substitute products of equivalent quality at no increase in contract price to ensure adherence to project schedule.

1.33 MATERIALS STANDARDS

.1 Materials shall be new and work shall conform to the minimum applicable standards of the Canadian General Standards Board, the Canadian Standards Association, the National Building Code of Canada and all applicable Provincial and Municipal codes. In the case of conflict or discrepancy the most stringent requirements shall apply.

.2 Products (materials, equipment and articles) incorporated in work shall be new, not damaged or defective and of best quality compatible with specifications for purpose intended. If requested by the design authorities, furnish evidence as type, source, and quality of product.

.3 Defective products will be rejected, regardless of previous inspections. Inspection does not relieve responsibility but is a precaution against oversight or error. Remove and replace defective products at own expense and be responsible for delays and expenses caused by rejection.

.4 Should any dispute arise as to the quality of fitness of products, the decision shall rest with the Departmental Representative based upon requirements of Contract Documents. The Departmental Representative's decision shall be final.

.5 Ensure that materials, equipment, services and labour are brought to site in sufficient quantity and in accordance with requirements of the work schedule.

.6 Use materials/products containing highest percentage of recycled and recovered materials practicable – consistent with maintaining cost effective satisfactory levels of completion. Adhere to waste reduction requirements for reuse or recycling of waste materials, thus diverting materials from landfill

1.34 SUSTAINABLE REQUIREMENTS

.1 Building Envelope:

.1 Maintain integrity of building envelope using air barriers and vapour retarders and avoid thermal bridging to provide thermal comfort and prevent condensation.

.2 Refer to Section 01 91 19 – Facility Shell Commissioning for blower door testing requirements.

.3 Refer to Section 07 01 20 – General Envelope Requirements for airtightness quality control requirements.

.2 Green certified building products:

.1 All products are to be certified to Ecologo, Green Seal, or EnergyStar.

.2 All wood products to be certified to CAN/CSA-Z809, FSC or SFI.

.3 All paint products are to meet MPI E2 environmentally friendly rating.

1.35 PROTECTION

.1 Protect finished work against damage until take-over.

.2 Protect the work and all surrounding equipment, landscape, structures, floors, ceilings, walls, etc., from damage.

.3 Make good, at no cost to the Owner, any damage caused.

.4 Protect any services, which are uncovered during work.

.5 Protect all areas adjacent to the construction areas from dust and debris produced during construction. Use hoarding, solid walls, drop cloths, sealed dust screens and tarps and clean up and vacuum up all debris daily.

1.36 MATERIALS OTHER THAN SPECIFIED

.1 Secure in writing, permission from the Departmental Representative to use any materials other than those specified.

.2 The listed suppliers/manufacturers are acceptable for their ability to meet the general design intent, quality and performance characteristics of the specified product. The listed equipment/materials does not endorse the acceptability of all products available from the listed manufacturers/suppliers.

.3 It remains the responsibility of the Contractor to ensure the products supplied are equal to the specified products in every aspect, operate as intended, and meet the performance specifications and physical dimensions of the specified product.

.4 The Contractor shall be fully responsible for any additional materials, to accommodate the use of equipment from the acceptable manufacturer and suppliers list.

1.37 PROPOSED SUBSTITUTIONS

.1 Where equivalent products have been submitted without specifics, it is the Contractor's responsibility to provide detailed specifications highlighting differences to the specified unit prior to requesting for acceptance as equal. Requests without inclusion of sufficient details will automatically be rejected. Provide differences and clear quantifiable characteristics why, how and where the unit meets performance and other requirements. Requests for substitution must be made to the Departmental Representative.

.2 Products specified serves to set minimum standard. Substituted equipment shall meet performance requirements and physical limitations, including fitting within space constraints.

1.38 CLEANING

.1 Remove waste materials and debris from the site at the end of each day. Leave the work area unencumbered upon completion of each work shift. Store materials and equipment.

.2 Ensure site is clean, orderly and neat at all times during the work shift. Provide additional cleaning as requested by the Departmental Representative and Owner.

.3 At the end of the project, remove dirt, dust and other disfigurations from all surfaces affected by the project including, but not limited to ceilings, walls, floors, fixtures and lights. Clean by dusting, damp wiping, washing, waxing and polishing to the satisfaction of the Departmental Representative and Owner.

.4 Upon completion, remove scaffolding, temporary protections and surplus materials. Make good any defects noted at this stage.

.5 Clean areas affected under contract, to a condition at least equal to that previously existing and to satisfaction of the Departmental Representative and Owner.

.6 Use only cleaning materials recommended by manufacturer of surface to be cleaned.

1.39 WASTE MANAGEMENT

.1 Comply with the Environmental Protection Act for waste management programs on construction and demolition projects.

.2 Waste Management: separate waste materials for reuse and recycling in accordance with Section 01 74 20 - Construction Waste Management.

.1 Remove recycling containers and bins from site and dispose of materials at appropriate facility.

.2 Source separate materials to be reused/recycled into specified sort areas.

1.40 O&M MANUALS

.1 Provide two (2) sets of operations and maintenance data detailed in Section 01 78 00 - Closeout Submittals. Data to include detailed technical information, documents and records describing operation and maintenance of individual components.

.2 Provide digital O&M set in portable document format (PDF) as detailed in Section 01 78 00 – Closeout Submittals.

1.41 RECORD DRAWINGS

.1 As work progresses, maintain accurate records to show deviations from the contract drawings. Just prior to completion of work, supply to the Departmental Representative one set of white prints with all deviations neatly inked in with red pen.

END OF SECTION

Part 1 General

1.1 INTENT

.1 This Section is to be read in conjunction with and is subject to the article related to Changes in the General Conditions of Contract.

1.2 DEFINITIONS

.1 “Administrative Fee” means the fee permitted for the administration of all paperwork related to a change in the work and any other work not covered by Direct Cost and Overhead Cost. The Administrative Fee does not cover profit.

.2 "Construction Equipment Cost" means the cost of rented or owned equipment, including cost of loading, transportation, unloading, erection, maintenance, fuel, dismantling and removal. This excludes small tools customarily used to carry out the Work by workers and valued at less than $500.00.

.3 “Direct Cost" means actual costs of material and labour as used in the valuation of changes article in the General Conditions of Contract. Direct Cost is the sum of costs directly related to or necessarily and properly incurred by Contractor, Subcontractors and Sub subcontractors in the performance of a change in the Work. Direct Cost shall exclude Overhead Cost and profit but shall include:

.1 Operation and maintenance of site offices,

.2 Administration at site offices,

.3 Material Cost,

.4 Total Labour Cost (Direct Labour and Payroll Burden Cost),

.5 Travel and Subsistence Cost,

.6 Temporary Work Cost,

.7 Construction Equipment Cost,

.8 Additional bonding and insurance cost,

.9 Salaries and other compensation of on-site superintendents and other supervisory personnel,

.10 Planning, estimating, and scheduling of work costs,

.11 Consumable and expendable materials for small tools, and

.12 Schedule Impact Cost, only where the change has an impact on critical path items,

.4 "Direct Labour Cost" means base wage costs of employees including overtime premium where applicable but excludes Payroll Burden Cost.

.5 "Material Cost" means cost of all Materials, including transportation and storage thereof. All rebates, refunds, returns from sale of surplus Materials, and trade discounts other than prompt payment discounts, shall be credited to the Province.

.6 "Overhead Cost" means Contractor's, Subcontractors' and Sub-subcontractors' costs related to:

.1 Operation and maintenance of head offices and branch offices,

.2 Administration at head offices and branch offices,

.3 General management, legal, audit, and accounting services,

.4 Buying organization,

.5 Corporate tax,

.6 Financing and other bank charges,

.7 Salaries and other compensation of off-site personnel,

.8 Recruitment and training of on-site staff, and

.9 All other costs not defined as direct costs.

.7 "Payroll Burden Cost" means actual costs paid by the employer for statutory charges and benefit costs additional to Direct Labour Cost. It includes the employer's contributions to Canada Pension Plan, Employment Insurance, Workers' Compensation Board, vacation pay, statutory holiday pay, health and wellness plan, and pension plan. It also includes the actual employer paid incentives for expendable and non-expendable small tools with a value of less than $500.00, safety and protective equipment, education and training, and other payroll costs which are hourly wage dependent.

.8 "Schedule Impact Cost" means Contractor's, Subcontractors' and Sub-subcontractors' costs related to an increase in the Contract Time where the change has an impact on the Project's critical path.

.9 "Temporary Work Cost" means cost of temporary structures, facilities, services, controls, and other temporary items used in the performance of a Change in the Work, including maintenance, dismantling and removal, less any residual value after dismantling and removal.

.10 "Total Labour Cost" means sum of Direct Labour Cost and Payroll Burden Cost.

.11 "Travel and Subsistence Cost" means travel and subsistence costs incurred by employees when working beyond a reasonable commuting distance from their normal place of residence.

1.3 CHANGE ORDER PROCEDURE

.1 The Departmental Representative will issue a Proposed Change Order (PCO) to the Contractor.

.2 Contractor shall submit a Contractor Proposal within 10 working days, stipulating:

.1 A lump sum increase, decrease, or no change in the Contract Price, and

.2 An increase, decrease, or no change in the Contract Time, on account of the proposed change in the Work.

.3 If, at any time, the Departmental Representative submits a large enough number PCOs or if a PCO is complex enough that the Contractor cannot prepare the Contractor Proposal(s) within the specified time, then the Contractor will confer with the

Departmental Representative within 1 working day of receipt of such PCOs, and the Contractor and Departmental Representative will jointly prepare an estimate of time necessary for preparing the Contractor Proposal(s), and an order of priority for the PCOs. The Contractor shall accommodate such necessary time at no increase in the Contract Time and at no additional cost to the Owner.

.4 Include in Contractor Proposal a detailed breakdown of lump sum increase or decrease, indicating Contractor's, and where applicable Subcontractors' and Sub subcontractors':

.1 Itemized direct costs applicable to the proposed change in the Work, and

.2 Applicable amounts for overhead and profit, in accordance with percentages specified above.

Do not include costs that would otherwise be incurred in the normal performance of the Work.

.5 Include in detailed breakdown of Contractor Proposal a further breakdown of the total labour cost component indicating, for each applicable trade and trade classification, the labour rate(s) and the number of hours from which the total labour cost is derived.

.6 Upon the Departmental Representatives approval and acceptance of the Contractor Proposal, a "Change Order" will be issued to Contractor.

1.4 CHANGE DIRECTIVE

.1 The Departmental Representative may issue a Change Directive to the Contractor to have the work of a required change proceed without undue delay in the event of any of the following:

.1 The work is required to proceed to avoid progress delays in the Work;

.2 The required changes in the work are of an urgent nature, or

.3 The Departmental Representative and the Contractor cannot come to an agreement in price for required changes in the Work.

.2 Upon receipt of a Change Directive, the Contractor shall proceed with the work of the required change on a time and material basis with records signed daily by the Contractor. Labour and equipment costs must be approved by the Departmental Representative prior to commencement of that work.

.3 Once the work of the required change has been completed, the Owner will issue a Change Order for that work based on the actual time and material expended in the performance of that work.

.4 If the Change Directive was issued due to a disagreement in the pricing of a change and the Departmental Representative and the Contractor comes to an agreement during the performance of that work, the Owner will issue a Change Order for that agreed amount and the recorded time and material expended will no longer be required or considered.

Part 2 Products

2.1 NOT USED

.1 Not Used.

Part 3 Execution

3.1 NOT USED

.1 Not Used.

END OF SECTION

Part 1 General

1.1 SECTION INCLUDES

.1 Shop drawings and product data.

.2 Samples.

.3 Certificates and transcripts.

1.2 ADMINISTRATIVE

.1 Submit to Departmental Representative submittals listed for review. Submit with reasonable promptness and in orderly sequence so as to not cause delay in Work. Failure to submit in ample time is not considered sufficient reason for an extension of Contract Time and no claim for extension by reason of such default will be allowed.

.2 Work affected by submittal shall not proceed until review is complete.

.3 Present shop drawings, product data, samples and mock-ups in SI Metric units.

.4 Where items or information is not produced in SI Metric units converted values are acceptable.

.5 Review submittals prior to submission to Departmental Representative. This review represents that necessary requirements have been determined and verified, or will be, and that each submittal has been checked and co-ordinated with requirements of Work and Contract Documents. Submittals not stamped, signed, dated and identified as to specific project will be returned without being examined and shall be considered rejected.

.6 Notify Departmental Representative, in writing at time of submission, identifying deviations from requirements of Contract Documents stating reasons for deviations.

.7 Verify field measurements and affected adjacent Work are coordinated.

.8 Contractor's responsibility for errors and omissions in submission is not relieved by Departmental Representative's review of submittals.

.9 Contractor's responsibility for deviations in submission from requirements of Contract Documents is not relieved by Departmental Representative review.

.10 Keep one reviewed copy of each submission on site.

1.3 SHOP DRAWINGS AND PRODUCT DATA

.1 The term "shop drawings" means drawings, diagrams, illustrations, schedules, performance charts, brochures and other data which are to be provided by Contractor to illustrate details of a portion of Work.

.2 Indicate materials, methods of construction and attachment or anchorage, erection diagrams, connections, explanatory notes and other information necessary for completion of Work. Where articles or equipment attach or connect to other articles or equipment, indicate that such items have been coordinated, regardless of Section under which adjacent items will be supplied and installed. Indicate cross references to design drawings and specifications.

.3 Allow 5 business days for Departmental Representative's review of each submission.

.4 Adjustments made on shop drawings by Departmental Representative are not intended to change Contract Price. If adjustments affect value of Work, state such in writing to Departmental Representative prior to proceeding with Work.

.5 Make changes in shop drawings as Departmental Representative may require, consistent with Contract Documents. When resubmitting, notify Departmental Representative in writing of any revisions other than those requested.

.6 Accompany submissions with transmittal letter, containing:

- .1 Date.
- .2 Project title and number.
- .3 Contractor's name and address.
- .4 Identification and quantity of each shop drawing, product data and sample.
- .5 Other pertinent data.

.7 Submissions shall include:

- .1 Date and revision dates.
- .2 Project title and number.
- .3 Name and address of:
  - .1 Subcontractor.
  - .2 Supplier.
  - .3 Manufacturer.
  - .4 Contractor's stamp, signed by Contractor's authorized representative certifying approval of submissions, verification of field measurements and compliance with Contract Documents.
  - .5 Details of appropriate portions of Work as applicable:
    - .1 Fabrication.
    - .2 Layout, showing dimensions, including identified field dimensions, and clearances.
    - .3 Setting or erection details.
    - .4 Capacities.
    - .5 Performance characteristics.
    - .6 Standards.
    - .7 Operating weight.
    - .8 Wiring diagrams.

.9 Single line and schematic diagrams.

.10 Relationship to adjacent work.

.8 After Departmental Representative's review, distribute copies.

.9 Submit (4) prints and an electronic copy of shop drawings for each requirement requested in specification Sections and as Departmental Representative may reasonably request.

.10 Submit (4) copies and an electronic copy of product data sheets or brochures for requirements requested in specification Sections and as requested by Departmental Representative were shop drawings will not be prepared due to standardized manufacture of product.

.11 Delete information not applicable to project.

.12 Supplement standard information to provide details applicable to project.

.13 If upon review by Departmental Representative, no errors or omissions are discovered or if only minor corrections are made, copies will be returned and fabrication and installation of Work may proceed. If shop drawings are rejected, noted copy will be returned and resubmission of corrected shop drawings, through same procedure indicated above, must be performed before fabrication and installation of Work may proceed.

1.4 SAMPLES

.1 Submit for review samples in duplicate as requested in respective specification Sections. Label samples with origin and intended use.

.2 Deliver samples prepaid to Departmental Representative's business address.

.3 Notify Departmental Representative in writing, at time of submission of deviations in samples from requirements of Contract Documents.

.4 Where colour, pattern or texture is criterion, submit full range of samples.

.5 Adjustments made on samples by Departmental Representative are not intended to change Contract Price. If adjustments affect value of Work, state such in writing to Departmental Representative prior to proceeding with Work.

.6 Make changes in samples which Departmental Representative may require, consistent with Contract Documents.

.7 Reviewed and accepted samples will become standard of workmanship and material against which installed Work will be verified.

1.5 PROGRESS PHOTOGRAPHS

.1 Submit weekly progress photographs.

1.6 CERTIFICATES AND TRANSCRIPTS

.1 Immediately after award of Contract, submit Workers' Compensation Board status.

Part 2 Products

2.1 NOT USED

.1 Not Used.

Part 3 Execution

3.1 NOT USED

.1 Not Used.

END OF SECTION

Part 1 General

1.1 SUBMITTALS

.1 Make Submittals in accordance with Section 01 11 55 - General Instructions.

.2 Submit a site-specific Health and Safety Plan, within 7 days after Notice to Proceed and prior to commencement of Work. The Health and Safety Plan must include:

.1 Site-specific safety hazard assessment.

.2 Safety and health risk or hazard analysis for site risks and operation.

.3 Submit Construction Safety Checklists after completion.

.4 Submit copies of reports or directions issued by Federal and Provincial health and safety inspectors.

.5 Submit copies of incident and accident reports.

.6 Submit to Departmental Representative with Material Safety Data Sheets (MSDS).

.7 Personal training requirements including as follows:

.1 Names of personnel and alternates responsible for site safety and health, hazards present on site, and use of personal protective equipment.

.8 The Departmental Representative will review the Contractor's site-specific Health and Safety Plan and provide comments to the Contractor within 7 days after receipt of the plan. Revise the plan as appropriate and resubmit plan to the Departmental Representative within 3 days after receipt of comments from the Departmental Representative.

.9 Medical Surveillance: Within 7 days after date of the Notice to Proceed and prior to mobilization to the site, submit certification of medical surveillance for site personnel, and submit additional certifications as personnel are sent to the site.

.10 On-site Contingency and Emergency Response Plan: Address the standard operating procedures to be implemented during emergency situations.

1.2 FILING OF NOTICE

.1 File Notice of Project with Territorial authorities prior to beginning of Work.

1.3 SAFETY ASSESSMENT

.1 Perform site specific safety hazard assessment related to project.

1.4 MEETINGS

.1 Pre-construction meetings: The Contractor shall attend a Pre-Construction Meeting.

1.5 REGULATORY REQUIREMENTS

.1 The Contractor shall comply with the specified standards and regulations to ensure safe operations. The latest editions are applicable.

- .1 Canada Labour Code Part II
- .2 Canada Occupational Safety and Health Regulations
- .3 National Building Code Part 8 – Safety Measures at Construction & Demolition Sites
- .4 National Fire Code Part 4 – Flammable and Combustible Liquids
- .5 National Fire Code Part 5 – Hazardous Process and Operations
- .6 Yukon Health and Safety Act and Regulations including;
  - .1 Construction Projects
  - .2 Occupational Health and Safety Act
  - .3 Workplace Hazardous Materials Information System (WHMIS)
  - .4 Trades Qualification and Apprenticeship Act
  - **.5** Electrical Safety Code

1.6 CONTRACTOR RESPONSIBILITY

.1 The Contractor shall be responsible for the Health and Safety of persons on site, safety of property on site and for the protection of persons adjacent to the site and environment to the extent that they may be affected by the conduct of Work.

.2 The Contractor shall comply with and enforce compliance by their employees with the safety requirements of the Contract Documents, applicable federal, provincial, local statutes, regulations, ordinances, and site-specific Health and Safety Plan. (i.e. Occupational Health and Safety Acts and Regulations for Construction Projects, Canada Labour Code Part II)

1.7 CONTRACTOR ACCIDENT AND INCIDENT REPORT

.1 The Contactor shall advise the Departmental Representative of any accident, injury, near-miss incident, fire, explosion or chemical spill occurring at the Work site and any visit to the site by a governmental enforcement official.

1.8 UNFORSEEN HAZARDS

.1 When unforeseen or peculiar safety-related factor, hazard, or condition occur during performance of Work, follow procedures in place for Employee's Right to Refuse Work in accordance with Acts and Regulations of Territory] having jurisdiction and advise Departmental Representative verbally and in writing.

1.9 WORK STOPPAGE

.1 The Departmental Representative and/or designated Health and Safety personnel may stop work for health and safety considerations.

.2 Give precedence to safety and health of public and site personnel and protection of environment over cost and schedule considerations for Work.

1.10 CORRECTION OF NON-COMPLIANCE

.1 Immediately address health and safety non-compliance issues identified by authority having jurisdiction or by Departmental Representative.

.2 Provide Departmental Representative with written report of action taken to correct non-compliance of health and safety issues identified.

.3 Departmental Representative may stop Work if non-compliance of health and safety regulations is not corrected.

1.11 DISCIPLINARY ACTIONS

.1 The Contractor's disregard and/or lack of compliance to health and safety measures, procedures and policies shall lead to disciplinary action by the Departmental Representative.

1.12 SITE HEALTH AND SAFETY POLICIES AND DIRECTIVES

.1 The Contractor shall comply and follow all prescribed site Health and Safety Policies and Directives including but not limited to the following;

.2 Worker Profile Sheet:

.1 The Contractor shall submit to the Departmental Representative a completed Worker Profile Sheet c/w all attachments including copies of licenses, certificates and permits for supporting qualifications to perform required work for a given project for each individual worker requiring access to the site. The completed Worker Profile Sheets are required for each individual worker prior to working on site.

.3 Hot Work Permit:

.1 The Contractor shall submit a completed Hot Work Permit to the Departmental Representative for review and approval. The Departmental Representative's approval is required prior to initiating hot work.

.4 Hot Tap Permit:

.1 The Contractor shall submit a completed Hot Tap Permit to the Departmental Representative for review and approval. Approval by the Departmental Representative is required prior to initiating hot tap work.

.5 Lock Out and Tag Out (LOTO) – Isolation Procedures:

.1 The Contractor shall submit a completed LOTO Isolation Form (Zero Energy) to the Departmental Representative for review and approval for all work requiring LOTO. The Departmental Representative's approval of isolation form is required prior to initiating LOTO work.

.6 Live Work Procedure:

.1 The Contractor shall submit a completed Live Work Procedure Form to the Departmental Representative for review and approval for all work requiring Live Work procedures. The Departmental Representative's approval of the Live Work Form is required prior to initiating Live Work.

.7 Emergency and Fire Evacuation Route:

.1 The Contractor shall obtain training on procedures of evacuating the site under emergency and/or fire situations. Contractor training and sign-off is required prior to initiating site work.

.8 Trades Qualifications and Apprenticeship Act:

.1 The Contractor shall sign-off confirming that the Trades Qualifications and Apprenticeship Act shall be observed and followed. Contractor sign-off is required prior to initiating site work.

Part 2 Products

2.1 NOT USED

.1 Not used.

Part 3 Execution

3.1 NOT USED

.1 Not used.

END OF SECTION

Part 1 General

1.1 CONSTRUCTION & DEMOLITON WASTE

.1 Carefully deconstruct and source separate materials/equipment and divert, from waste destined for landfill to maximum extent possible. Target for this project is 75% diversion from landfill. Reuse, recycle, compost, anaerobic digest or sell material for reuse except where indicated otherwise. On site sales are not permitted.

.2 Source separate waste and maintain waste audits in accordance with the Environment Act, Yukon Regulation RSY 2002, c.76.

.1 Provide facilities for collection, handling and storage of source separated wastes.

.2 Source separate the following waste:

.1 Corrugated cardboard.

.2 Fiberglass or cellulose insulation.

.3 Plastics.

.4 Steel.

.5 Wood, not including painted or treated wood or laminated wood.

.3 Submit a waste reduction work plan indicating the materials and quantities of material that will be recycled and diverted from landfill.

.1 Indicate how material being removed from the site will be reused, recycled, composted or anaerobically digested.

.4 Submit proof that all waste is being disposed of at a licensed land fill site or waste transfer site. A copy of the disposal/waste transfer site's license and a letter verifying that said landfill site will accept the waste must be supplied to Departmental Representative prior to removal of waste from the demolition site.

1.2 WASTE PROCESSING SITES

.1 City of Whitehorse Waste Management Facility

.1 Address: Mile 91972 (Mile 919.72) Alaska Highway, Whitehorse, Yukon.

.2 Telephone: 867-668-1621 or 867-668-8350.

.2 Raven Recycling Society.

.1 Address: 100 Galena Road, Whitehorse, Yukon, Y1A 2W6.

.2 Telephone: 867-667-7269.

.3 Email: info@ravenrecycling.org

.4 Internet: http://www.ravenrecycling.org

.3 P&M Recycling

.1 Address: 607 Ray Street, Whitehorse, Yukon, Y1A 2T4.

.2 Telephone: 867-667-4338.

.4 Sale' Salvage

.1 Address: Alaska Highway (at Carcross Cut-off), Yukon

.2 Telephone: 867-668-7450

1.3 DISPOSAL OF WASTES

.1 Keep records of construction waste including:

.1 Number and size of bins.

.2 Waste type of each bin.

.3 Total tonnage generated.

.4 Tonnage reused or recycled.

.5 Reused or recycled waste destination.

.2 Remove materials on-site as Work progresses.

.3 Prepare project summary to verify destination and quantities on a material-by-material basis as identified in the waste audit.

Part 2 Products

2.1 NOT USED

.1 Not used.

Part 3 Execution

3.1 WASTE DIVERSION REPORT

.1 At completion of Project, prepare written Waste Diversion Report indicating quantities of materials reused, recycled or disposed of as well as the following:

.1 Identify final diversion results and measure success against goals from Waste Reduction Workplan.

.2 Compare final quantities/percentages diverted with initial projections in Waste Audit and Waste Reduction Workplan and explain variances.

.1 Supporting documentation.

.2 Waybills and tracking forms.

.3 Description of issues, resolutions and lessons learned.

3.2 CANADIAN GOVERNMENTAL DEPARTMENTS CHIEF RESPONSIBILITY FOR THE ENVIRONMENT

.1 Schedule G - Government Chief Responsibility for the Environment:

Province	Address	General Inquires	Fax
Yukon	Yukon Renewable Resources PO Box 2703	867-667-5683	867-667-3641

	Whitehorse YT Y1A 2C6		

END OF SECTION

Part 1 General

1.1 SECTION INCLUDES

.1 As-built, samples, and specifications.

.2 Equipment and systems.

.3 Product data, materials and finishes, and related information.

.4 Operation and maintenance data.

.5 Spare parts, special tools and maintenance materials.

.6 Warranties and bonds.

1.2 SUBMISSION

.1 Prepare instructions and data using personnel experienced in maintenance and operation of described products.

.2 Copy will be returned after final inspection, with Departmental Representative's comments.

.3 Revise content of documents as required prior to final submittal.

.4 Two weeks prior to Substantial Performance of the Work, submit to the Departmental Representative, two final copies of operating and maintenance manuals in English. The Departmental Representative’s review to determine Substantial Performance of the Work will not take place until the Departmental Representative has received acceptable copies of the O&M manuals.

.5 Ensure spare parts, maintenance materials and special tools provided are new, undamaged or defective, and of same quality and manufacture as products provided in Work.

.6 If requested, furnish evidence as to type, source and quality of products provided.

.7 Defective products will be rejected, regardless of previous inspections. Replace products at own expense.

.8 Pay costs of transportation.

1.3 FORMAT

.1 Organize data in the form of an instructional manual.

.2 Binders: bound using expanding spine catalogue binders complete with plated piano hinges, hard covered, expandable pots, 210 x 275 mm with spine and face embossed with Project title. Provide sufficient volumes to allow each binder to hold system data

while in full closed position, and to be no more than 75% full. Provide artwork and colour to Owner for approval prior to binder construction

.3 When multiple binders are used, correlate data into related consistent groupings. Identify contents of each binder on spine.

.4 Cover: Identify each binder with type or printed title 'Project Record Documents'; list title of project and identify subject matter of contents.

.5 Arrange content by systems, under Section numbers and sequence of Table of Contents.

.6 Provide tabbed fly leaf for each separate product and system, with typed description of product and major component parts of equipment.

.7 Text: Manufacturer's printed data, or typewritten data. Data in tables are to be entered in MS-Excel format. Include PDF's and spreadsheet on CD/DVD.

.8 Language: All text to be in English.

.9 Drawings: provide with reinforced punched binder tab. Bind in with text; fold larger drawings to size of text pages.

.10 Electronic Copy: Provide electronic copy of all closeout submittals on a USB storage device as follows:

.1 File type to be a composite electronically indexed portable document format file (PDF).

.2 Name each indexed document file in the composite electronic index with applicable item name. Include a complete electronically linked operation and maintenance directory.

.3 Use electronic files prepared by manufacturer where available. Where scanning of paper documents is required, configure scanned file for minimum readable file size.

.4 File Names and Bookmarks:

.1 Enable bookmarking of individual documents based on file names.

.2 Name document files to correspond to system, subsystem, and equipment names used in manual directory and table of contents.

.3 Group documents for each system and subsystem into individual composite bookmarked files, then create composite manual, so that resulting bookmarks reflect the system, subsystem, and equipment names in a readily navigated file tree.

.4 Configure electronic manual to display bookmark panel on opening file.

.5 Enable inserted reviewer comments on draft submittals.

1.4 CONTENTS - EACH VOLUME

.1 Table of Contents: provide title of project;

.1 date of submission; names,

.2 addresses, and telephone numbers of Departmental Representative and Contractor with name of responsible parties;

.3 schedule of products and systems, indexed to content of volume.

.2 For each product or system:

.1 list names, addresses and telephone numbers of subcontractors and suppliers, including local source of supplies and replacement parts.

.3 Product Data: mark each sheet to clearly identify specific products and component parts, and data applicable to installation; delete inapplicable information.

.4 Drawings: supplement product data to illustrate relations of component parts of equipment and systems, to show control and flow diagrams.

.5 Typewritten Text: as required to supplement product data. Provide logical sequence of instructions for each procedure, incorporating manufacturer's instructions.

1.5 AS-BUILTS AND SAMPLES

.1 In addition to requirements in General Instructions, maintain at the site for Departmental Representative one record copy of:

.1 Contract Drawings.

.2 Specifications.

.3 Addenda.

.4 Change Orders and other modifications to the Contract.

.5 Reviewed shop drawings, product data, and samples.

.6 Field test records.

.7 Inspection certificates.

.8 Manufacturer's certificates.

.2 Store record documents and samples in field office apart from documents used for construction. Provide files, racks, and secure storage.

.3 Label record documents and file in accordance with Section number listings in List of Contents of this Project Manual. Label each document "PROJECT RECORD" in neat, large, printed letters.

.4 Maintain record documents in clean, dry and legible condition. Do not use record documents for construction purposes.

.5 Keep record documents and samples available for inspection by Departmental Representative.

1.6 RECORDING ACTUAL SITE CONDITIONS

.1 Record information on set of black line opaque drawings, and in copy of Project Manual, provided by Departmental Representative.

.2 Provide felt tip marking pens, maintaining separate colours for each major system, for recording information.

.3 Record information concurrently with construction progress. Do not conceal Work until required information is recorded.

.4 Contract Drawings and shop drawings: legibly mark each item to record actual construction, including:

.1 Measured depths of elements of foundation in relation to finish first floor datum.

.2 Measured horizontal and vertical locations of underground utilities and appurtenances, referenced to permanent surface improvements.

.3 Measured locations of internal utilities and appurtenances, referenced to visible and accessible features of construction.

.4 Field changes of dimension and detail.

.5 Changes made by change orders.

.6 Details not on original Contract Drawings.

.7 References to related shop drawings and modifications.

.5 Specifications: legibly mark each item to record actual construction, including:

.1 Manufacturer, trade name, and catalogue number of each product actually installed, particularly optional items and substitute items.

.2 Changes made by Addenda and change orders.

.6 Other Documents: maintain manufacturer's certifications, inspection certifications, field test records, required by individual specifications sections.

1.7 MATERIALS AND FINISHES

.1 Building Products, Applied Materials, and Finishes: include product data, with catalogue number, size, composition, and colour and texture designations. Provide information for re-ordering custom manufactured products.

.2 Instructions for cleaning agents and methods, precautions against detrimental agents and methods, and recommended schedule for cleaning and maintenance.

.3 Moisture-Protection and Weather-Exposed Products: include manufacturer's recommendations for cleaning agents and methods, precautions against detrimental agents and methods, and recommended schedule for cleaning and maintenance.

.4 Additional Requirements: as specified in individual specifications sections.

1.8 SPARE PARTS

.1 Provide spare parts, in quantities specified in individual specification sections.

.2 Provide items of same manufacture and quality as items in Work.

.3 Deliver to site; place and store.

.4 Receive and catalogue items. Submit inventory listing to Departmental Representative. Include approved listings in Maintenance Manual.

.5 Obtain receipt for delivered products and submit prior to final payment.

1.9 MAINTENANCE MATERIALS

.1 Provide maintenance and extra materials, in quantities specified in individual specification sections.

.2 Provide items of same manufacture and quality as items in Work.

.3 Deliver to site; place and store.

.4 Receive and catalogue items. Submit inventory listing to Departmental Representative. Include approved listings in Maintenance Manual.

.5 Obtain receipt for delivered products and submit prior to final payment.

1.10 SPECIAL TOOLS

.1 Provide special tools, in quantities specified in individual specification section.

.2 Provide items with tags identifying their associated function and equipment.

.3 Deliver to site; place and store.

.4 Receive and catalogue items. Submit inventory listing to Departmental Representative. Include approved listings in Maintenance Manual.

1.11 STORAGE, HANDLING AND PROTECTION

.1 Store spare parts, maintenance materials, and special tools in manner to prevent damage or deterioration.

.2 Store in original and undamaged condition with manufacturer's seal and labels intact.

.3 Store components subject to damage from weather in weatherproof enclosures.

.4 Store paints and freezable materials in a heated and ventilated room.

.5 Remove and replace damaged products at own expense and to satisfaction of Departmental Representative.

1.12 WARRANTIES AND BONDS

.1 Separate each warranty or bond with index tab sheets keyed to Table of Contents listing.

.2 List subcontractor, supplier, and manufacturer, with name, address, and telephone number of responsible principal.

.3 Obtain warranties and bonds, executed in duplicate by subcontractors, suppliers, and manufacturers, within ten days after completion of the applicable item of work.

.4 Except for items put into use with Owner's permission, leave date of beginning of time of warranty until the Date of Substantial Performance is determined.

.5 Verify that documents are in proper form, contain full information, and are notarized.

.6 Co-execute submittals when required.

.7 Retain warranties and bonds until time specified for submittal.

1.13 AIRTIGHTNESS

.1 Prepare airtightness checklist for the Owner indicating steps that must be taken to maintain building airtightness should any future penetrations be made through the building airtightness layer.

.2 List products to be used for maintaining airtightness.

.3 Include as-built building envelope details with air barrier identified with a solid red line.

.4 Include checklist, products and drawings at front of operations and maintenance manual for east reference.

Part 2 Products

2.1 NOT USED

.1 Not Used.

Part 3 Execution

3.1 NOT USED

.1 Not Used.

END OF SECTION

Part 1 General

1.1 SECTION INCLUDES:

.1 Information regarding minimum expectations and requirements of the envelope commissioning process.

1.2 RELATED SECTIONS

.1 Division 7.

1.3 REFERENCES

.1 American Society for Testing and Materials International (ASTM)

.1 ASTM E779-03, Standard Practice for Determining Air Leakage Rate by Fan Pressurization.

.2 ASTM E1186-03, Standard Practice for Air Leakage Site Detection in Building Envelopes and Air Barrier Systems.

.3 ASTM E1827-11, Standard Test Methods for Determining Airtightness of Buildings Using an Orifice Blower Door.

.2 Canadian General Standards Board (CGSB)

.1 CAN/CGSB 149.10-M86, Determination of the Airtightness of Building Envelopes by the Fan Depressurization Method.

1.4 DEFINITIONS

.1 As Operated: the measurement of total air leakage of a building under normal operating conditions. Energuide requires that intentional openings, such as dryer vents, combustion air inlets and fireplace chimneys to be left as-is and included in the results.

.2 Building Science Principles: best building envelope practices and recommended construction procedures, methods and materials that enhance air tightness, moisture resistance and water vapour control of building envelopes as researched and tested by National Research Council of Canada; Canada Mortgage and Housing Corporation; or other recognized building envelope research organizations.

.3 Blower Door: A machine used to measure the airtightness of a building.

.4 Blower Door Testing: analysis of the building envelope by conducting an air depressurization test to provide specific information concerning the airtightness of the building. Equipment operated by qualified energy auditor technician having specific knowledge of building science principles as they relate to building enclosures and materials, and as follows:

.1 Quantitative Inspection: inspection procedure using measurements of airtightness, assigning specific numeric values to observed deficient patterns, and presenting that information in Quantitative Blower Door Testing Report.

.2 Identify presence of leaks using a smoke pencil. Makes note and rates their importance in the report.

.5 Blower Door Testing Report: organized document stating inspection purpose, climatic data during inspection, general findings not limited to appropriately analyzed testing data with corresponding visual photographs to express observed deficient conditions, statements interpreting observed deficient conditions.

.1 Quantitative Blower Door Testing Report: developed by means of quantitative blower door testing where measurement of airtightness is used to determine relative fault severity. Recommendations identify corrective measures required to fix deficient conditions.

.6 Total Air Leakage (TAL): TAL is the air leakage rate through the building envelope during the air tightness test done using the Fan Depressurization Method and measured in L/s.

.7 Normalized Leakage Rate (NLR_{75}): Leakage rate normalized to envelope area at an indoor to outdoor pressure differential of 75 Pa. It is calculated by dividing the TAL by the total building envelope area. It has units of L/s-m

.8 Enclosure Assembly: The series of assembles including, but not limited to, exterior walls, demising walls, fire separations, ceiling assemblies, floor assemblies, windows, and doors.

1.5 ACTION AND INFORMATIONAL SUBMITTALS

.1 Provide submittals in accordance with Section 01 33 00 - Submittal Procedures.

.2 Provide electronic copy of Blower Door Testing Report Departmental Representative.

.3 Submit Blower Door Testing Report containing specific test results listed in this section, organized in accordance with CAN/CGSB 149.10-M86 and as follows:

.1 Scoping statement and problem identification.

.2 Names and qualifications of personnel performing inspections, interpreting data and preparing Blower Door Testing Report.

.3 Ambient conditions under which inspections were performed including, but not limited to, as follows:

.1 Time of day that scans were performed.

.2 Wind conditions during inspection.

.3 Pressure differential readings for duration of inspection and prior to inspection.

.4 Temperature ranges at which blower door testing data was collected.

.4 Types of equipment used and methods of confirmation including, but not limited to, as follows:

.1 Blower door testing equipment including frame, gauges, fans, cloth door, and air current testers.

.2 Blower door testing software used.

.3 Values and equipment used to calibrate airtightness readings.

.5 Diagnoses and identification including photographs and commentary indicating severity and types of air leakage detected:

.1 Record anomalies related to air leakage, onto analogue and/or digital storage mediums or files.

.2 Convert relevant information to photo quality images for inclusion in written Blower Door Testing Report.

.6 Interpretation of observed conditions and deficiencies including probable causes of each anomaly detected.

.7 Recommendations for solutions and related additional inspections that may be required to verify that repairs have been completed.

.8 Attachments and appendices including, but not limited to, drawings, visual images, thermographic images, and calculations used to determine air leakage.

.4 Submit calibration report dated within one year prior to inspection demonstrating that blower door testing equipment is accurately calibrated and measuring pressure differentials in accordance with equipment manufacturer's specifications.

.5 Submit information obtained during testing and for preparing Blower Door Testing Report for use of Departmental Representative; submit original data used to prepare Blower Door Testing Report as separate package.

1.6 OBJECTIVES

.1 Construct air barrier such that overall Air Changes per hour at 50 Pascals (ACH50) is less or equal to **0.6** when the building is tested as per standard CAN/CGSB-149.10-M or ASTM E- 779-03.

.2 Demonstrate and document that building envelope meets the above requirement.

1.7 DESCIPTION OF WORK

.1 Construct all envelope assembly details as indicated.

.1 Ensure the air barrier materials in each suite enclosure assembly are continuous.

.2 Seal all penetrations through air barrier material(s) to limit air leakage through the assembly. Penetrations include, but are not limited to, communications, plumbing, electrical and HVAC.

.3 Connect the air barrier material(s) in all intersecting envelope component assemblies to limit air leakage.

.2 Carry out progress, and final air tightness testing.

1.8 QUALITY ASSURANCE

.1 Technician Qualifications: provide personnel having minimum 3 years of related experience and having following minimum levels of training:

.2 Testing Agency Qualification: at least five years of experience.

.3 Test Witness: The Contractor shall provide two weeks of notice to Departmental Representative to witness the mock up suite and entire building test.

Part 2 Products

2.1 EQUIPMENT

.1 Blower door testing equipment:

.1 Fan:

.1 Variable speed control (solid-state control)

.2 Must operate on 110 to 125 vac/60 Hz supply

.3 Minimum flow at maximum fan speed to be at least 2501 L/s (5300 CFM) at 50 Pa pressure difference

.4 Must be able to both pressurize and depressurize the size of building being tested.

.5 Calibration curves and test verification certificate must be included with each fan

.2 Blower Door Frame:

.1 Width: adjustable from 81.3 cm to 99 cm to fit a wide variety of doors or a suitably close range.

.2 Height: adjustable from 129.5 cm to 221 cm or a suitably close range

.3 Door frame edge seal: flexible gasket or inflatable edge seal

.4 Door frame material: wood, aluminum or metal

.5 Door frame cover: nylon bag or moulded plastic or fibreglass

.3 Pressure and fan flow gauges:

.1 Analogue gauges (Dwyer Magnahelic) for measuring the building pressure and flow (one for low flow and second for high flow) or digital pressure gauge for simultaneous or switchable display of pressure and airflow readings

.2 Pressure gauge unit: Pa

.3 Pressure range: 0 to 60 Pa (suggested for building pressure)

.4 Measurement resolution: 1 Pa for analogue gauges; 0.1 Pa for digital micro-mamometers

.5 Wind damping should be built into pressure gauge or available as add-on

.6 Calibration of pressure measurement as per CGSB Standard No. 149.10-M86

.7 Flow measurement unit: L/s.

.8 Flow measurement resolution: 1/100 times the flow reading

.9 Flow range: capable of measuring a minimum airflow of 30 L/s within its operating range

.10 Calibration of flow measurement as per CGSB Standard No. 149.10-M86

.4 Software and Calculation Procedures

.1 Calculation software based on current calibration data for blower door selected to determine airtightness results. Data analysis procedure and reporting must meet requirements set in CGSB Standard No. 149.10-M86

.2 Calibration characteristics and technical manuals

.2 Related Equipment: provide related equipment for performing blower door testing including, but not limited to, as follows:

.1 Ambient Air Thermometer.

.2 Anemometer.

.3 Air Flow Meter.

.4 Smoke Candles or generators.

.5 Visible Still Image (35 mm) or Digital Cameras having minimum 4 mega pixel image resolution.

.6 Other equipment or supplies necessary to complete building envelope inspection in accordance with CAN/CGSB 149-GP-2M.

Part 3 Execution

3.1 AIRTIGHTNESS TESTING

.1 The Testing Agency is responsible for carrying out blower door tests for the whole building.

.2 Blower door tests must be carried out in accordance with Standard CAN/CSGB- 149.10-M86, Determination of the Airtightness of Building Envelopes by the Fan Depressurization Method or Standard ASTM E 779-03, Standard Test Method for Determining Air Leakage Rate by Fan Pressurization.

.3 Upon completion, provide the Departmental Representative Contractor with records of all blower tests carried out on the whole building and conducted in accordance with the testing and sampling methodology noted above.

.4 Upon completion of the Final Airtightness test the Testing Agency will issue a report summarizing the air tightness results and related findings. If required, the report will include corrective or remedial actions. The Contractor is responsible for carrying out any corrective or remedial work listed in the report. Upon completion of the said work, the Contractor must notify the Testing Agency so that the building can be re-tested.

3.2 CLEANING

.1 Proceed in accordance with Section 01 11 55 – General Instructions.

.2 Remove the blower door and return the building to pre-test conditions after the completion of each test. Seal and restore surfaces where openings were required for test equipment and return HVAC systems to normal operational modes.

END OF SECTION

Part 1 General

1.1 RELATED REQUIREMENTS

.1 Section 03 20 00 – Concrete Reinforcing

.2 Section 03 30 00 – Cast-in-Place Concrete

1.2 REFERENCES

.1 Canadian Standards Association (CSA International)

.1 CSA-A23.1-04/A23.2-04, Concrete Materials and Methods of Concrete Construction/Methods of Test and Standard Practices for Concrete.

.2 CSA-O86S1-05, Supplement No. 1 to CAN/CSA-O86-01, Engineering Design in Wood.

.3 CSA O121-M1978(R2003), Douglas Fir Plywood.

.4 CSA O151-04, Canadian Softwood Plywood.

.5 CAN/CSA-O325.0-92(R2003), Construction Sheathing.

.6 CSA O437 Series-[93(R2006)], Standards for OSB and Waferboard.

.7 CSA S269.1-1975(R2003), Falsework for Construction Purposes.

.8 CAN/CSA-S269.3-M92(R2003), Concrete Formwork, National Standard of Canada

.2 Underwriters' Laboratories of Canada (ULC)

.1 CAN/ULC-S701-05, Standard for Thermal Insulation, Polystyrene, Boards and Pipe Covering.

1.3 SUBMITTALS

.1 Submittals in accordance with Section 01 33 00 - Submittal Procedures.

.2 Submit shop drawings for formwork and falsework.

.3 Submit WHMIS MSDS - Material Safety Data Sheets in accordance with Section 01 47 15 - Sustainable Requirements: Construction and Section 02 81 01 - Hazardous Materials.

.4 Co-ordinate submittal requirements and provide submittals required by Section 01 47 15 - Sustainable Requirements: Construction.

.5 Indicate method and schedule of construction, shoring, stripping and re-shoring procedures, materials, arrangement of joints, special architectural exposed finishes, ties, liners, and locations of temporary embedded parts. Comply with CSA S269.1, for falsework drawings. Comply with CAN/CSA-S269.3 for formwork drawings.

.6 Indicate formwork design data: permissible rate of concrete placement, and temperature of concrete, in forms.

1.4 DELIVERY, STORAGE AND HANDLING

.1 Deliver, store and handle materials in accordance with Section 01 61 00 - Common Product Requirements.

Part 2 Products

2.1 MATERIALS

.1 Materials and resources in accordance with Section

.2 Formwork materials:

.1 For concrete without special architectural features, use wood and wood product formwork materials to CSA-O121 and CAN/CSA-O86.

.2 For concrete with special architectural features, use formwork materials to CSA-A23.1/A23.2.

.3 Rigid insulation board: to CAN/ULC-S701.

.3 Form ties:

.1 For concrete not designated 'Architectural', use removable or snap-off metal ties, fixed or adjustable length, free of devices leaving holes larger than 25 mm diameter in concrete surface.

.2 For Architectural concrete, use snap ties complete with plastic cones and light grey concrete plugs.

.4 Form liner:

.1 Plywood: high density overlay, Douglas Fir to CSA O121, Canadian Softwood Plywood to CSA O151, square edge, 19 mm thick.

.5 Form release agent: non-toxic, biodegradable, low VOC.

.6 Form stripping agent: colourless, non-toxic, biodegradable, low VOC.

.7 Falsework materials: to CSA-S269.1.

.8 Sealant: to Section 07 92 00 - Joint Sealants.

Part 3 Execution

3.1 FABRICATION AND ERECTION

.1 Verify lines, levels and centres before proceeding with formwork/falsework and ensure dimensions agree with drawings.

.2 Fabricate and erect falsework in accordance with CSA S269.1.

.3 Refer to architectural drawings for concrete members requiring architectural exposed finishes.

.4 Fabricate and erect formwork in accordance with CAN/CSA-S269.3 to produce finished concrete conforming to shape, dimensions, locations and levels indicated within tolerances required by CSA-A23.1/A23.2.

.5 Align form joints and make watertight.

.1 Keep form joints to minimum.

.6 Use 20 mm chamfer strips on external corners and/or 20 mm fillets at interior corners, joints, unless specified otherwise.

.7 Form chases, slots, openings, drips, recesses, expansion and control joints as indicated.

.8 Construct forms for architectural concrete, and place ties as directed.

.1 Joint pattern not necessarily based on using standard size panels or maximum permissible spacing of ties.

.9 Build in anchors, sleeves, and other inserts required to accommodate Work specified in other sections.

.1 Ensure that anchors and inserts will not protrude beyond surfaces designated to receive applied finishes, including painting.

.10 Clean formwork in accordance with CSA-A23.1/A23.2, before placing concrete.

3.2 REMOVAL AND RESHORING

.1 Leave formwork in place for following minimum periods of time after placing concrete.

.1 7 days for walls and sides of beams.

.2 3 days for footings.

.2 Remove formwork when concrete has reached 70% of its design strength or minimum period noted above, whichever comes later, and replace immediately with adequate reshoring.

.3 Re-use formwork and falsework subject to requirements of CSA-A23.1/A23.2.

END OF SECTION

Part 1 General

1.1 RELATED REQUIREMENTS

.1 Section 03 10 00 – Concrete Forming and Accessories

.2 Section 03 30 00 – Cast-in-Place Concrete

1.2 PRICE AND PAYMENT PROCEDURES

.1 No measurement will be made under this Section.

.1 Include reinforcement costs in items of concrete work in Section 03 30 00 - Cast-In-Place Concrete.

1.3 REFERENCES

.1 CSA International

.1 CSA-A23.1-09/A23.2-09, Concrete Materials and Methods of Concrete Construction/Test Methods and Standard Practices for Concrete.

.2 CAN/CSA-A23.3-04(R2010), Design of Concrete Structures.

.3 CSA-G30.18-09, Carbon Steel Bars for Concrete Reinforcement.

.4 CSA-G40.20/G40.21-04(R2009), General Requirements for Rolled or Welded Structural Quality Steel/Structural Quality Steel.

.5 SP-66-04, ACI Detailing Manual 2004.

.6 ASTM A185/A185M-07, Standard Specification for Steel Welded Wire Reinforcement, Plain, for Concrete.

1.4 SUBMITTALS

.1 Submit in accordance with Section 01 33 00 - Submittal Procedures.

.2 Prepare reinforcement drawings in accordance with RSIC Manual of Standard Practice and ACI 315.

.3 Shop Drawings:

.1 Submit drawings including placing of reinforcement and indicate:

.1 Bar bending details.

.2 Lists.

.3 Quantities of reinforcement.

.4 Sizes, spacing, locations of reinforcement with identifying code marks to permit correct placement without reference to structural drawings

.2 Detail lap lengths and bar development lengths to CAN/CSA-A23.3, unless otherwise indicated.

1.5 DELIVERY, STORAGE AND HANDLING

.1 Deliver, store and handle materials in accordance with Section 01 61 00 - Common Product Requirements.

.2 Storage and Handling Requirements:

.1 Store materials off ground.

.2 Replace defective or damaged materials with new.

Part 2 Products

2.1 MATERIALS

.1 Substitute different size bars only if permitted in writing by Departmental Representative.

.2 Reinforcing steel: billet steel, grade 400, deformed bars to CSA-G30.18, unless indicated otherwise.

.3 Reinforcing steel: weldable low alloy steel deformed bars to CSA-G30.18.

.4 Cold-drawn annealed steel wire ties: to ASTM A82/A82M.

.5 Deformed steel wire for concrete reinforcement: to ASTM A82/A82M.

.6 Welded steel wire fabric: to ASTM A185/A185M.

.1 Provide in flat sheets only.

.7 Chairs, bolsters, bar supports, spacers: to CSA-A23.1/A23.2.

2.2 FABRICATION

.1 Fabricate reinforcing steel in accordance with CSA-A23.1/A23.2, ACI 315 and Reinforcing Steel Manual of Standard Practice by the Reinforcing Steel Institute of Canada.

.1 ACI 315R unless indicated otherwise.

.2 Obtain Departmental Representative's written approval for locations of reinforcement splices other than those shown on placing drawings.

.3 Ship bundles of bar reinforcement, clearly identified in accordance with bar bending details and lists.

2.3 SOURCE QUALITY CONTROL

.1 Upon request, provide Departmental Representative with certified copy of mill test report of reinforcing steel, showing physical and chemical analysis, minimum 4 weeks prior to beginning reinforcing work.

.2 Upon request inform Departmental Representative of proposed source of material to be supplied.

Part 3 Execution

3.1 FIELD BENDING

.1 Do not field bend or field weld reinforcement except where indicated or authorized by Departmental Representative.

.2 When field bending is authorized, bend without heat, applying slow and steady pressure.

.3 Replace bars, which develop cracks or splits.

3.2 PLACING REINFORCEMENT

.1 Place reinforcing steel as indicated on placing drawings in accordance with CSA-A23.1/A23.2.

.2 Prior to placing concrete, obtain Departmental Representative's approval of reinforcing material and placement.

.3 Ensure cover to reinforcement is maintained during concrete pour.

END OF SECTION

Part 1 General

1.1 RELATED REQUIREMENTS

.1 Section 03 10 00 – Concrete Forming and Accessories

.2 Section 03 20 00 – Concrete Reinforcing

1.2 MEASUREMENT PROCEDURES

.1 Cast-in-place concrete will not be measured but will be paid for as fixed price item.

.2 Supply and installation of anchor bolts, nuts and washers and bolt grouting will not be measured but considered incidental to work.

1.3 REFERENCES

.1 Abbreviations and Acronyms:

.1 Portland Cement: hydraulic cement, blended hydraulic cement and Portland-limestone cement.

.1 Type GU, GUb and GUL - General use cement.

.2 Type MS and MSb - Moderate sulphate-resistant cement.

.3 Type HS and HSb - High sulphate-resistant cement.

.2 Reference Standards:

.1 ASTM International

.1 ASTM C260/C260M-10a, Standard Specification for Air-Entraining Admixtures for Concrete.

.2 ASTM C309-07, Standard Specification for Liquid Membrane-Forming Compounds for Curing Concrete.

.3 ASTM C494/C494M-10a, Standard Specification for Chemical Admixtures for Concrete.

.4 ASTM C1017/C1017M-07, Standard Specification for Chemical Admixtures for Use in Producing Flowing Concrete.

.2 Canadian General Standards Board (CGSB)

.1 CAN/CGSB-37.2-M88, Emulsified Asphalt, Mineral Colloid-Type, Unfilled, for Dampproofing and Waterproofing and for Roof Coatings.

.2 CAN/CGSB-51.34-M86(R1988), Vapour Barrier, Polyethylene Sheet for Use in Building Construction.

.3 CSA International

.1 CSA A23.1/A23.2-09, Concrete Materials and Methods of Concrete Construction/Methods of Test and Standard Practices for Concrete.

.2 CSA A283-06, Qualification Code for Concrete Testing Laboratories.

.3 CSA A3000-08, Cementitious Materials Compendium (Consists of A3001, A3002, A3003, A3004 and A3005).

1.4 SUBMITTALS

.1 Provide submittals in accordance with Section 01 33 00 - Submittal Procedures.

.2 Provide testing reports for review by Departmental Representative and do not proceed without written approval when deviations from mix design or parameters are found.

.3 Concrete pours: provide accurate records of poured concrete items indicating date and location of pour, quality, air temperature and test samples taken as described in PART 3 - FIELD QUALITY CONTROL.

1.5 QUALITY ASSURANCE

.1 Quality Assurance: in accordance with Section 01 45 00 - Quality Control.

.2 Provide minimum 4 weeks prior to starting concrete work, with valid and recognized certificate from plant delivering concrete.

.1 Provide test data and certification by qualified independent inspection and testing laboratory that materials and mix designs used in concrete mixture will meet specified requirements.

.3 Minimum 4 weeks prior to starting concrete work, provide proposed quality control procedures for review by Departmental Representative on following items:

.1 Hot weather concrete.

.2 Cold weather concrete.

.3 Curing.

.4 Finishes.

.5 Formwork removal.

.6 Joints.

.4 Quality Control Plan: provide written report verifying compliance that concrete in place meets performance requirements of concrete as established in PART 2 - PRODUCTS.

1.6 DELIVERY, STORAGE AND HANDLING

.1 Delivery and Acceptance Requirements:

.1 Concrete hauling time: deliver to site of Work and discharged within 120 minutes maximum after batching.

.1 Do not modify maximum time limit without receipt of prior written agreement from laboratory representative and concrete producer as described in CSA A23.1/A23.2.

.2 Deviations to be submitted for review by Departmental Representative.

.2 Concrete delivery: ensure continuous concrete delivery from plant meets CSA A23.1/A23.2.

Part 2 Products

2.1 DESIGN CRITERIA

.1 Performance: to CSA A23.1/A23.2, and as described in MIXES of PART 2 - PRODUCTS.

2.2 PERFORMANCE CRITERIA

.1 Quality Control Plan: ensure concrete supplier meets performance criteria of concrete as established by Departmental Representative and provide verification of compliance as described in PART 1 - QUALITY ASSURANCE.

2.3 MATERIALS

.1 Portland Cement: to CSA A3001, Type GU.

.2 Blended hydraulic cement: Type GUb, GU to CSA A3001.

.3 Water: to CSA A23.1.

.4 Aggregates: to CSA A23.1/A23.2.

.5 Admixtures:

.1 Air entraining admixture: to ASTM C260.

.2 Chemical admixture: to ASTM C494, ASTM C1017. Departmental Representative and Materials Testing Agency to approve accelerating or set retarding admixtures during cold and hot weather placing.

.6 Weep hole tubes: plastic.

.7 Polyethylene film: CAN/CGSB-51.34 refer to architectural documents for thickness

2.4 MIXES

.1 Alternative 1 - Performance Method for specifying concrete: to meet Departmental Representative performance criteria to CSA A23.1/A23.2.

.1 Ensure concrete supplier meets performance criteria as established below and provide verification of compliance as in Quality Control Plan.

.2 Provide concrete mix to meet following plastic state requirements:

.1 Workability: free of surface blemishes, loss of mortar, colour variations, segregation.

.3 Concrete supplier's certification: both batch plant and materials meet CSA A23.1 requirements.

Part 3 Execution

3.1 PREPARATION

.1 Obtain Departmental Representative's written approval before placing concrete.

.1 Provide 7 days minimum notice prior to placing of concrete.

.2 Place concrete reinforcing in accordance with Section 03 20 00 - Concrete Reinforcing.

.3 During concreting operations:

.1 Development of cold joints not allowed.

.2 Ensure concrete delivery and handling facilitates placing with minimum of re-handling, and without damage to existing structure or Work.

.4 Pumping of concrete is permitted only after approval of equipment and mix.

.5 Ensure reinforcement and inserts are not disturbed during concrete placement.

.6 Prior to placing of concrete obtain Departmental Representative's approval of proposed method for protection of concrete during placing and curing in adverse weather.

.7 Protect previous Work from staining.

.8 Clean and remove stains prior to application for concrete finishes.

.9 Maintain accurate records of poured concrete items to indicate date, location of pour, quality, air temperature and test samples taken.

.10 In locations where new concrete is dowelled to existing work, drill holes in existing concrete.

.1 Place steel dowels of deformed steel reinforcing bars and pack solidly with epoxy grout to anchor and hold dowels in positions as indicated.

.11 Do not place load upon new concrete until authorized by Departmental Representative.

3.2 INSTALLATION/APPLICATION

.1 Do cast-in-place concrete work to CSA A23.1/A23.2.

.2 Sleeves and inserts:

.1 Do not permit penetrations, sleeves, ducts, pipes or other openings to pass through joists, beams, column capitals or columns, except where indicated or approved by Departmental Representative.

.2 Where approved by Departmental Representative, set sleeves, ties, pipe hangers and other inserts and openings as indicated or specified elsewhere.

.3 Sleeves and openings greater than 100 x 100 mm not indicated, must be reviewed by Departmental Representative.

.4 Do not eliminate or displace reinforcement to accommodate hardware. If inserts cannot be located as specified, obtain written approval of modifications from Departmental Representative before placing of concrete.

.5 Confirm locations and sizes of sleeves and openings shown on drawings.

.6 Set special inserts for strength testing as indicated and as required by non-destructive method of testing concrete.

.3 Anchor bolts:

.1 Set anchor bolts to templates in co-ordination with appropriate trade prior to placing concrete.

.2 Set anchor bolts in holes drilled after concrete has set only after receipt of written approval Departmental Representative.

.1 Drilled holes: to manufacturers' recommendations.

.3 Protect anchor bolt holes from water accumulations, snow and ice build-ups.

.4 Set bolts and fill holes with epoxy type adhesive / grout.

.5 Locate anchor bolts used in connection with expansion shoes, rollers and rockers with due regard to ambient temperature at time of erection.

.4 Grout under base plates and machinery using procedures in accordance with manufacturer's recommendations which result in 100 % contact over grouted area.

.5 Finishing and curing:

.1 Finish concrete to CSA A23.1/A23.2.

.2 Use procedures as reviewed by Departmental Representative or those noted in CSA A23.1/A23.2 to remove excess bleed water. Ensure surface is not damaged.

.3 Use curing compounds compatible with applied finish on concrete surfaces. Provide written declaration that compounds used are compatible.

.4 Finish concrete floor to CSA A23.1/A23.2. Class A.

.5 Concrete floor to have finish hardness equal to or greater than 6 Mohs hardness to CSA A23.1/A23.2.

.6 Provide swirl-trowelled finish unless otherwise indicated.

.7 Rub exposed sharp edges of concrete with carborundum to produce 3 mm minimum radius edges unless otherwise indicated.

3.3 SURFACE TOLERANCE

.1 Concrete tolerance to CSA A23.1 Straightedge Method 8mm +/-, FF = 20: FL = 15; Waviness Index Method to 4mm SWI.

3.4 FIELD QUALITY CONTROL

.1 Site tests: conduct tests as follows in accordance with Section 01 45 00 - Quality Control and submit report as described in PART 1 - SUBMITTALS.

.1 Concrete pours.

.2 Slump.

.3 Air content.

.4 Compressive strength at 7 and 28 days.

.5 Air and concrete temperature.

.2 Inspection and testing of concrete and concrete materials will be carried out by testing laboratory for review to CSA A23.1/A23.2.

.1 Ensure testing laboratory is certified to CSA A283.

.3 Ensure test results are distributed for discussion at pre-pouring concrete meeting between testing laboratory and Departmental Representative.

.4 Owner will pay for costs of tests as specified in Section 01 29 83 - Payment Procedures for Testing Laboratory Services.

.5 Take additional test cylinders during cold weather concreting. Cure cylinders on job site under same conditions as concrete which they represent.

.6 Non-Destructive Methods for Testing Concrete: to CSA A23.1/A23.2.

.7 Inspection or testing by Departmental Representative will not augment or replace Contractor quality control nor relieve Contractor of his contractual responsibility.

END OF SECTION

Part 1 General

1.1 RELATED REQUIREMENTSPEC NOTE:

.1 Section 03 30 00 – Cast-in-Place Concrete

.2 Section 07 21 16 - Blanket Insulation: Insulation for wood framed cavities.

.3 Section 07 21 26 – Blown Insulation: Insulation for wood framed cavities and attics.

.4 Section 07 25 00 – Weather Barriers: Weather, air, and vapour barrier installation in wood framed assemblies.

1.2 REFERENCE STANDARDS

.1 Canadian General Standards Board (CGSB)

.1 CAN/CGSB-51.32-M77, Sheathing, Membrane, Breather Type.

.2 CAN/CGSB-71.26-M88, Adhesive for Field-Gluing Plywood to Lumber Framing for Floor Systems.

.2 CSA Group (CSA)

.1 CSA B111-1974 (R2003), Wire Nails, Spikes and Staples.

.2 CSA O112.9-10, Evaluation of Adhesives for Structural Wood Products (Exterior Exposure).

.3 CSA O121-08(R2013), Douglas Fir Plywood.

.4 CSA O141-05(R2014), Softwood Lumber.

.5 CSA O325-07(R2012), Construction Sheathing.

.6 CAN/CSA-Z809-08, Sustainable Forest Management.

.3 Forest Stewardship Council (FSC)

.1 FSC-STD-01-001-2004, FSC Principle and Criteria for Forest Stewardship.

.4 National Lumber Grades Authority (NLGA)

.1 Standard Grading Rules for Canadian Lumber 2010.

.5 National Research Council Canada (NRC)

.1 National Building Code of Canada 2015 (NBC).

.6 Sustainable Forestry Initiative (SFI)

.1 SFI-2015-2019 Standard.

.7 Underwriters' Laboratories of Canada (ULC)

.1 CAN/ULC-S706-09, Standard for Wood Fibre Insulating Boards for Buildings.

1.3 ACTION AND INFORMATIONAL SUBMITTALS

.1 Submit in accordance with Section 01 33 00- Submittal Procedures.

.2 Product Data:

.1 Submit manufacturer's instructions, printed product literature and data sheets for wood products and accessories and include product characteristics, performance criteria, physical size, finish and limitations.

.2 Submit CCMC Product Evaluation Report for engineered wood products.

.3 Submit manufacturer’s installation instructions.

1.4 SUSTAINABLE DESIGN SUBMITTALS

.1 Submit in accordance with Section 01 33 00- Submittal Procedures to confirm that products and procedures conform to specified sustainability requirements.

.2 Submit vendor's Chain-of-Custody Certificate number for CAN/CSA-Z809 or FSC or SFI certified wood.

1.5 DELIVERY, STORAGE, AND HANDLING

.1 Deliver, store and handle materials in accordance with Section 01 11 55 – General Instructions.

Part 2 Products

2.1 SUSTAINABILITY CHARACTERISTICS

.1 Provide wood framing products as specified and with the following sustainability characteristics.

.2 Lumber, Finger Jointed Lumber, structural composite lumber (SCL): to be CAN/CSA-Z809 or FSC or SFI certified.

.3 OSB: certified to CAN/CSA-Z809 or FSC or SFI.

2.2 STRUCTURAL FRAMING

.1 Lumber: softwood, S4S, moisture content 19% (S-dry) or less in accordance with following standards:

.1 CSA O141.

.2 NLGA Standard Grading Rules for Canadian Lumber.

.2 Framing and board lumber: in accordance with NBC.

2.3 FURRING AND BLOCKING

.1 Furring, blocking, nailing strips, grounds, rough bucks, cants, curbs, fascia backing and sleepers:

.1 Board sizes: SPF Species, No 2 or better grade.

.2 Dimension sizes: "Standard" light framing or better grade.

2.4 PANEL MATERIALS AND APPLICATION

.1 Roof sheathing:

.1 Plywood, DFP sheathing grade, T&G edge, to CSA O121, standard construction.

.2 Construction sheathing product: to CAN/CSA-O325.0

.2 Exterior wall and ceiling sheathing & air barrier / vapour retarder:

.1 OSB, grade O-1, 18 mm thick.

.3 Exterior wall sheathing - exterior:

.1 Insulating wood fiberboard, single-ply (dry process), hydrophobized, T&G panel edge, with the following properties:

.1 Compressive Strength: Minimum 70 kPa.

.2 Air Flow Resistivity: Minimum 100 kPa/m^2

.3 Thermal Resistance: 2.00 m^2K/W

.4 Size: 1760 x 600 mm

.5 Thickness: 80 mm.

.6 Standard of Acceptance: GUTEX Multitherm.

.4 Interior wall and ceiling panelling:

.1 Plywood, DFP, G1S, Grade A

.2 Provide intumescent paint finish behind electrical panels.

2.5 ACCESSORIES

.1 General purpose adhesive: to CSA O112.9.

.2 Nails, spikes and staples: to ASTM F1667.

.3 Bolts: 12.5 mm diameter unless indicated otherwise, complete with nuts and washers.

.4 Joist hangers, connectors and fasteners: in accordance with accepted shop drawings, minimum 1 mm thick sheet steel, galvanized to minimum ZF001 coating designation.

.5 Nailing discs: flat caps, minimum 25 mm diameter, minimum 0.4 mm thick, fibre, formed to prevent dishing. Bell or cup shapes not acceptable.

.6 Fastener Finishes:

.1 Galvanizing: to CAN/CSA-G164 use galvanized fasteners for exterior work.

.2 Plated finish: use cadmium plated fasteners for interior work.

.7 Sill Plate Gasket: Closed cell polyethylene foam gasket in width to match sill plate width, 6 mm thick.

Part 3 Execution

3.1 EXAMINATION

.1 Verification of Conditions: verify conditions of substrates previously installed under other Sections or Contracts are acceptable for product installation in accordance with manufacturer's written instructions.

3.2 SYSTEMS INTEGRATION

.1 Install air barrier and vapour retarder sheeting around framing members to ensure continuity of protection and to lap and seal to main sheets.

.2 Install insulation in exterior wall framing cavities that will not be accessible after completion of framing.

.3 Install sill plate gasket in continuous lengths between concrete surfaces and wood framing.

3.3 FRAMING INSTALLATION

.1 Comply with requirements of NBC 2015 Part 9 supplemented by following paragraphs.

.2 Install members true to line, levels and elevations, square and plumb.

.3 Construct continuous members from pieces of longest practical length.

.4 Install spanning members with "crown-edge" up.

.5 Select exposed framing for appearance. Install panel materials so that grade-marks and other defacing marks are concealed or are removed by sanding where materials are left exposed.

.6 Frame, anchor, fasten, tie and brace members to provide necessary strength and rigidity.

.7 Countersink bolts where necessary to provide clearance for other work.

.8 Install specified panel product for each application.

.9 Use nailing disks for soft sheathing as recommended by sheathing manufacturer.

3.4 FURRING AND BLOCKING

.1 Install furring and blocking as required to space-out and support casework, cabinets, wall and ceiling finishes, facings, fascia, soffit, siding, electrical equipment mounting boards, and other work as required.

.2 Install furring to support siding applied vertically (or horizontally where indicated) where sheathing is not suitable for direct nailing.

.1 Align and plumb faces of furring and blocking to tolerance of 1:600.

.3 Install rough bucks, nailers and linings to rough openings as required to provide backing for frames and other work.

.4 Install wood cants, fascia backing, nailers, curbs and other wood supports as required and secure using galvanized fasteners.

3.5 CLEANING

.1 Progress Cleaning: clean in accordance with Section 01 11 55 – General Instructions.

3.6 PROTECTION

.1 Protect installed products and components from damage during construction.

.2 Repair damage to adjacent materials caused by rough carpentry installation.

END OF SECTION

Part 1 General

1.1 RELATED REQUIREMENTS

.1 Section 06 10 00 – Rough Carpentry

1.2 REFERENCES

.1 CSA International

.1 CAN/CSA O80 Series-08, Wood Preservation.

.2 CSA O86 Consolidation-09, Engineering Design in Wood.

.3 CSA O141-[05(R2009)], Softwood Lumber.

.4 CSA S307-M1980(R2001), Load Test Procedure for Wood Roof Trusses for Houses and Small Buildings.

.5 CSA S347-99(R2009), Method of Test for Evaluation of Truss Plates Used in Lumber Joints.

.6 CSA W47.1-09, Certification of Companies for Fusion Welding of Steel.

.7 CAN/CSA-Z809-08, Sustainable Forest Management.

.2 Forest Stewardship Council (FSC)

.1 FSC-STD-01-001-2004, FSC Principle and Criteria for Forest Stewardship.

.3 National Lumber Grades Authority (NLGA)

.1 Standard Grading Rules for Canadian Lumber 2010.

.4 National Research Council (NRC)/Institute for Research in Construction (IRC) - Canadian Construction Materials Centre (CCMC)

.1 CCMC-on-line edition, Registry of Product Evaluations.

.5 Truss Plate Institute of Canada (TPIC)

.1 TPIC - 2007, Truss Design Procedures and Specifications for Light Metal Plate Connected Wood Trusses (Limit States Design).

.6 Sustainable Forestry Initiative (SFI)

.1 SFI-2010-2014 Standard.

1.3 ACTION AND INFORMATIONAL SUBMITTALS

.1 Submit in accordance with Section 01 33 00 - Submittal Procedures.

.2 Product Data:

.1 Submit manufacturer's instructions, printed product literature and data sheets for wood trusses and include product characteristics, performance criteria, physical size, finish and limitations.

.3 Shop Drawings:

.1 Submit drawings stamped and signed by professional engineer registered or licensed in Territory of Yukon, Canada.

.2 Include on drawings:

.1 Each shop and erection drawing submission showing connection details.

.2 Indicate special structural application and specification as according to local authorities having jurisdiction.

.3 Indicate TPIC Truss Design Procedure and CSA O86 Engineering Design in Wood and specific CCMC Product Registry number of the truss plates

.4 Indicate species, sizes, and stress grades of lumber used as truss members. Show pitch, span, camber, configuration and spacing of trusses. Indicate connector types, thicknesses, sizes, locations and design value. Show bearing details. Indicate design load for members.

.5 Submit stress diagram or print-out of computer design indicating design load for truss members. Indicate allowable load and stress increase.

.6 Indicate arrangement of webs or other members to accommodate ducts and other specialties.

.7 Show location of lateral bracing for compression members.

.8 Test reports: submit certified test reports for prefabricated wood trusses from approved independent testing laboratories, indicating compliance with specifications for specified performance characteristics and physical properties.

.9 Certificates: submit certificates signed by manufacturer certifying that materials comply with specified performance characteristics and physical properties.

.10 Instructions: submit manufacturer's installation instructions.

.4 Sustainable Design Submittals:

.1 Wood Certification: submit vendor's Chain-of-Custody Certificate number for CAN/CSA-Z809 or FSC or SFI certified wood.

1.4 QUALITY ASSURANCE

.1 Qualifications:

.1 Fabricator for trusses to show evidence of quality control program such as provided by regional wood truss associations, or equivalent.

.2 Fabricator for welded steel connections to be certified in accordance with CSA W47.1.

.2 Sustainable Standards Certification:

.1 Certified Wood: submit listing of wood products and materials used in accordance with CAN/CSA-Z809 or FSC or SFI.

1.5 DELIVERY, STORAGE AND HANDLING

.1 Deliver, store and handle materials in accordance with Section 01 11 55 – General Instructions and with manufacturer's written instructions.

.2 Delivery and Acceptance Requirements: deliver materials to site in original factory packaging, labelled with manufacturer's name and address.

.3 Storage and Handling Requirements:

.1 Store materials in accordance with manufacturer's recommendations in clean, dry, well-ventilated area.

.2 Provide bearing supports and bracings. Prevent bending, warping and overturning of trusses.

Part 2 Products

2.1 DESIGN REQUIREMENTS

.1 Design light metal plate connected wood trusses in accordance with TPIC truss design procedures for wood truss chords and webs in accordance with engineering properties in CSA O86.

.2 Design light metal plate connected wood trusses in accordance with TPIC truss design procedures for truss joint designs to test engineering properties in accordance with CSA S347 and listed in CCMC Registry of Product Evaluations.

.3 Design trusses, bracing, and bridging in accordance with CSA O86.1 for loads indicated, for building locality as ascertained by NBC, Climatic Information for Building Design in Canada, and minimum uniform and minimum concentrated loadings stipulated in NBC commentary.

2.2 MATERIALS

.1 Lumber: SPF species, Machines Stress Rated or grade to suit truss design, softwood, S4S, with maximum moisture content of 16% at time of fabrication, fire retardant treated plywood and to following standards:

.1 CSA O141.

.2 NLGA (National Lumber Grading Association), Standard Grading Rules for Canadian Lumber.

.3 CAN/CSA-Z809 or FSC or SFI certified.

.2 Fastenings: to CSA O86.

2.3 FABRICATION

.1 Fabricate wood trusses in accordance with approved shop drawings.

.2 Provide for design camber and roof slopes when positioning truss members.

.3 Connect members using metal gusset plates.

2.4 SOURCE QUALITY CONTROL

.1 Identify lumber by grade stamp of an agency certified by Canadian Lumber Standards Administration Board.

.2 Certify by agency accredited by Standards Council of Canada that [preservative] [fire retardant] treated wood in accordance with CAN/CSA O80 Series.

Part 3 Execution

3.1 MANUFACTURER'S INSTRUCTIONS

.1 Compliance: comply with manufacturer's written recommendations or specifications, including product technical bulletins, handling, storage and installation instructions, and datasheet.

3.2 ERECTION

.1 Erect wood trusses as indicated and in accordance with approved shop drawings.

.2 Handling, installation, erection, bracing and lifting in accordance with manufacturers instructions.

.3 Make adequate provisions for handling and erection stresses.

.4 Exercise care to prevent out-of-plane bending of trusses.

.5 Install temporary horizontal and cross bracing to hold trusses plumb and in safe condition until permanent bracing and decking are installed.

.6 Install permanent bracing in accordance with approved shop drawings, prior to application of loads to trusses.

.7 Do not cut or remove any truss material without approval of Departmental Representative.

3.3 FIELD QUALITY CONTROL

.1 Manufacturer's Field Services:

.1 Have manufacturer of products supplied under this Section review work involved in handling, installation/application, protection and cleaning of its product[s], and submit written reports, in acceptable format, to verify compliance of work with Contract.

.2 Manufacturer's field services: provide manufacturer's field services, consisting of product use recommendations and periodic site visits for inspection of product installation, in accordance with manufacturer's instructions.

.3 Schedule site visits to review work at stages listed:

.1 After delivery and storage of products, and when preparatory work on which work of this Section depends is complete, but before installation begins.

.2 Twice during progress of work at 90% complete.

.2 Upon completion of work, after cleaning is carried out.

3.4 CLEANING

.1 Clean in accordance with Section 01 11 55 – General Instructions.

END OF SECTION

Part 1 General

1.1 RELATED SECTIONS

.1 Division 07

.2 Division 08

1.2 MOCK-UP

.1 Construct mock-ups in accordance with Section 01 11 55 – General Requirements.

1.3 AIRTIGHTNESS TESTING

.1 Contractor to complete airtightness testing as specified in Section 01 91 19 – Facility Shell Commissioning at the following stages of construction:

.1 Upon completion of the installation of the air barrier and windows and doors, to identify any air leaks, and allow for correction.

.2 At substantial completion of construction.

.2 Contractor is to correct details as required by Departmental Representative and independent Airtightness testing agent to achieve specified airtightness.

1.4 QUALITY CONTROL

.1 The Contractor is responsible for ensuring that all sub-contractors are aware of and adhere to the project airtightness requirements.

.2 The Contractor's site superintendent or another appointed staff member will the "airtightness champion" and is responsible for maintaining the integrity of the air barrier, and is to report any issues to the Departmental Representative.

.3 The roles and responsibilities of the "airtightness champion" are as follows:

.1 Understand & communicate the airtight/vapour control layer and wind/weather barrier layer strategy. Ensure its adoption by all trades on-site.

.2 Know where the individual layers are and which materials form them. Supervise and inspect all relevant works affecting these internal and external planes.

.3 Ensure that regular site meetings emphasize Air Leakage and the necessity to avoid damage to both barrier planes.

.4 Manage relevant variations, which can often compromise the Air Barrier.

.5 Operate an inspection checklist for key elements, interfaces and penetrations. Keep a camera on hand to take photographic evidence of any damage to the individual layers.

.6 Take regular temperature and humidity readings: some tapes seals and membranes will not cure or seal effectively if the atmospheric relative humidity is above 80%.

.7 Being knowledgeable about the correct application conditions for each product being used in the airtightness layer.

.8 Ensure all materials that form part of the layers are correctly prepared and used and that proprietary products (including cleaning and priming materials) are available on site well before they are required.

.9 Liaise with airtightness testing specialists to organize visits for audits and tests, ensuring all necessary preparatory works are complete in time.

.10 Verify that weather conditions are satisfactory for testing in advance of issuing a final test confirmation (using Environment Canada advanced forecasts supported).

.11 Ensure that envelope area and volume for the building is correctly calculated and confirmed with the airtightness tester.

.12 Ensure that recommendations from post-testing air leakage audits are acted upon.

.13 Airtightness compliance logs for trades and contractors: ensure records are up to date and any variations recorded/remediated.

.14 Use a leakage check kit to check the effectiveness of any remedial sealing works.

.4 Rectify any damage to the airtight layer caused by the contractor or any sub-contractor.

Part 2 Products

2.1 SIGNAGE

.1 Provide interior signage at entry to building indicating the following:

.1 **NOTICE**
THIS IS AN AIR-TIGHT BUILDING.
No drilling, chasing, or cutting without prior consent from the superintendent.
Any damages caused to the air-tight layer will be at the expense of the trade.
For any questions, contact the project superintendent: [phone number here]

.2 Signage to be a minimum of 300 x 300mm, and digitally printed on coroplast.

Part 3 Execution

3.1 NOT USED

.1 Not Used.

END OF SECTION

Part 1 General

1.1 RELATED REQUIREMENTS

.1 Section 00 31 32 – Geotechnical Report.

.2 Division 03 - Concrete

.3 Section 07 01 20 – General Envelope Requirements.

.4 Section 07 25 00 – Weather Barriers.

1.2 REFERENCES

.1 Canadian General Standards Board (CGSB)

.1 CGSB 71-GP-24M-77(R1983), Adhesive, Flexible, for Bonding Cellular polystyrene Insulation.

.2 Underwriters Laboratories of Canada (ULC)

.1 CAN/ULC-S701-05, Standard for Thermal Insulation, Polystyrene, Boards and Pipe Coverings.

.3 Health Canada/Workplace Hazardous Materials Information System (WHMIS)

.1 Material Safety Data Sheets (MSDS).

1.3 ACTION AND INFORMATIONAL SUBMITTALS

.1 Product Data:

.1 Submit manufacturer's printed product literature, specifications and data sheet in accordance with Section 01 33 00 - Submittal Procedures.

.2 Manufacturer's Instructions:

.1 Submit manufacturer's installation instructions.

1.4 QUALITY ASSURANCE

.1 Health and Safety Requirements: do construction occupational health and safety in accordance with Section 01 35 30 - Health and Safety Requirements.

1.5 WASTE MANAGEMENT AND DISPOSAL

.1 Separate waste materials for recycling in accordance with Section 01 74 19 - Construction Waste Management.

Part 2 Products

2.1 INSULATION

.1 Under slab and perimeter skirting: Expanded polystyrene (EPS): to CAN/ULC-S701.

.1 Type: 2.

.2 Compressive strength: 60psi.

.3 Thickness: as indicated.

.4 Size: 1220 x 2440.

.5 Edges: square.

.6 Acceptable Product: Terrafoam HS-60 as manufactured by Beaver Plastics.

.2 Perimeter of Foundation: Concrete topped extruded polystyrene insulation to CAN/ULC-S701.

.1 Type: 4

.2 Thermal Resistance: RSI 0.87/25.4 mm

.3 Thickness: 100 mm

.4 Internal and External Corners: Mitered wall panel corners.

.5 Edges: Square.

.6 Acceptable Products:

.1 CFI Wall Panel by Tech-Crete Processors Ltd;

.3 Insulated Sheathing: Refer to Section 06 10 00 – Miscellaneous Rough Carpentry.

2.2 ADHESIVE

.1 Adhesive (for polystyrene): to CGSB 71-GP-24.

Part 3 Execution

3.1 MANUFACTURER'S INSTRUCTIONS

.1 Compliance: comply with manufacturer's written data, including product technical bulletins, product catalogue installation instructions, product carton installation instructions, and data sheets.

3.2 WORKMANSHIP

.1 Install insulation after building substrate materials are dry.

.2 Install insulation to maintain continuity of thermal protection to building elements and spaces.

.3 Fit insulation tight around electrical boxes, plumbing and heating pipes and ducts, around exterior doors and windows and other protrusions.

.4 Cut and trim insulation neatly to fit spaces. Butt joints tightly, offset vertical joints. Use only insulation boards free from chipped or broken edges. Use largest possible dimensions to reduce number of joints.

.5 Offset both vertical and horizontal joints in multiple layer applications.

.6 Do not enclose insulation until it has been inspected and approved by Departmental Representative.

3.3 EXAMINATION

.1 Examine substrates and immediately inform Departmental Representative in writing of defects.

.2 Prior to commencement of work ensure:

.1 Substrates are firm, straight, smooth, dry, free of snow, ice or frost, and clean of dust and debris.

3.4 BELOW-SLAB INSULATION INSTALLATION

.1 Place insulation over compacted granular fill.

.2 Extend boards as required to achieve noted R rating in heated space above plus allowance at perimeter.

.3 Cut and fit insulation tight to protrusions or interruptions to insulation plane.

.4 Prevent insulation from being displaced or damaged while placing vapour/gas retarder and concrete slab.

3.5 BELOW GRADE RIGID INSULATION INSTALLATION

.1 Apply adhesive to back of vertically installed insulation boards as recommended by manufacturer. Offset joints between layers of insulation.

.2 Lay horizontal boards on level compacted sand fill on prepared subgrade. Offset joints between layers of insulation. Minimum 50 mm thickness in any individual layer. Cover insulation with compacted sand fill.

.3 Fit adjacent insulation boards together tightly.

.4 Cut and trim insulation around service penetrations. Caulk joints.

3.6 CONCRETE FACED INSULATION INSTALLATION

.1 Follow directives of surface preparation required in the manufacturer's literature.

.2 Install concrete faced insulation with mounting clips and mitred corners according to manufacturer’s written instructions. Install prefinished top flashing lapping over top surface of insulation.

.3 Apply insulation boards with adhesive on non-surfaced rigid insulation.

.4 Cut and trim insulation around service penetrations. Caulk joints.

3.7 CLEANING

.1 Upon completion of installation, remove surplus materials, rubbish, tools and equipment barriers.

END OF SECTION

Part 1 General

1.1 RELATED REQUIREMENTS

.1 Section 06 10 00 –Rough Carpentry

.2 Section 07 01 20 – General Envelope Requirements.

.3 Section 07 25 00 – Weather Barriers.

1.2 REFERENCE STANDARDS

.1 ASTM International

.1 ASTM C665-12, Standard Specification for Mineral-Fiber Blanket Thermal Insulation for Light Frame Construction and Manufactured Housing.

.2 ASTM C1320-10, Standard Practice for Installation of Mineral Fiber Batt and Blanket Thermal Insulation for Light Frame Construction.

.2 Underwriters Laboratories of Canada (ULC)

.1 CAN/ULC-S702-2012, Standard for Mineral Fibre Insulation for Buildings.

1.3 ACTION AND INFORMATIONAL SUBMITTALS

.1 Submit in accordance with Section 01 33 00- Submittal Procedures.

.2 Product Data:

.1 Submit manufacturer's instructions, printed product literature and data sheets for blanket insulation and include product characteristics, performance criteria, physical size, finish and limitations.

.3 Certificates:

.1 Submit product certificates signed by manufacturer certifying materials comply with specified performance characteristics and criteria and physical requirements.

.4 Test Reports:

.1 Submit certified test reports showing compliance with specified performance characteristics and physical properties.

1.4 DELIVERY, STORAGE AND HANDLING

.1 Deliver, store and handle materials in accordance with manufacturer's written instructions.

Part 2 Products

2.1 INSULATION

.1 Batt and blanket mineral fibre: to ASTM C665.

.1 Type: 1.

.2 Thickness: as indicated.

Part 3 Execution

3.1 EXAMINATION

.1 Verification of Conditions: verify that conditions of substrate previously installed under other Sections or Contracts are acceptable for blanket insulation application in accordance with manufacturer's written instructions.

3.2 INSULATION INSTALLATION

.1 Install insulation to maintain continuity of thermal protection to building elements and spaces and to ASTM C1320.

.2 Fit insulation closely around electrical boxes, pipes, ducts, frames and other objects in or passing through insulation.

.3 Do not compress insulation to fit into spaces.

.4 Keep insulation minimum 75 mm from heat emitting devices such as recessed light fixtures, and minimum 50 mm from sidewalls of CAN/ULC-S604 Type A chimneys and CSA B149.1 and CSA B149.2 Type B and L vents.

.5 Do not enclose insulation until it has been inspected and approved by Departmental Representative.

3.3 CLEANING

.1 Progress Cleaning: clean in accordance with Section 01 11 55 -General Instructions.

END OF SECTION

Part 1 General

1.1 RELATED REQUIREMENTS

.1 Section 06 10 00 – Rough Carpentry.

.2 Section 06 17 53 – Shop Fabricated Wood Trusses.

.3 Section 07 01 20 – General Envelope Requirements.

.4 Section 07 25 00 – Weather Barriers.

1.2 REFERENCE STANDARDS

.1 Underwriters Laboratories of Canada (ULC)

.1 CAN/ULC-S702-2012, Standard for Mineral Fibre Insulation for Buildings.

.2 CAN/ULC-S703-2009, Standard for Cellulose Fibre Insulation (CFI) for Buildings.

1.3 ACTION AND INFORMATIONAL SUBMITTALS

.1 Submit in accordance with Section 01 33 00- Submittal Procedures.

.2 Product Data:

.1 Submit manufacturer's instructions, printed product literature and data sheets for loose fill insulation and include product characteristics, performance criteria, physical size, finish and limitations.

.2 Submit 2 copies of WHMIS MSDS in accordance with Section 01 35 30 - Health and Safety Requirements.

.3 Certificates:

.1 Submit product certificates signed by manufacturer certifying materials comply with specified performance characteristics and criteria and physical requirements.

.4 Test Reports:

.1 Submit certified test reports showing compliance with specified performance characteristics and physical properties.

1.4 QUALITY ASSURANCE

.1 Provide 1 copy of Certification of Coverage and Application Chart in accordance with CAN/ULC-S702 to Departmental Representative, certified by Applicator's signature that the information is correct.

1.5 DELIVERY, STORAGE AND HANDLING

.1 Deliver, store and handle materials in accordance with manufacturer's written instructions.

.2 Delivery and Acceptance Requirements: deliver materials to site in original factory packaging, labelled with manufacturer's name and address.

1.6 SITE CONDITIONS

.1 Apply insulation only when surfaces and ambient temperatures are within manufacturers' prescribed limits.

.2 Safety: comply with requirements of Workplace Hazardous Materials Information System (WHMIS) regarding use, handling, storage, and disposal of insulation materials.

.3 Protection:

.1 Provide temporary enclosures to prevent dust from contaminating air beyond application area.

.2 Protect adjacent surfaces and equipment from damage by fall-out, and dust.

Part 2 Products

2.1 MATERIALS

.1 Mineral fibre insulation: to CAN/ULC-S702, Ecolabel certified, containing a minimum of 75 % recycled content, asbestos-free mineral fibre.

.1 Type 5 - blowing wool, suitable for application by means of pneumatic equipment.

.2 Cellulose fibre insulation: to CAN/ULC-S703, pure cellulose fibres, chemically impregnated to resist mould, mildew and fire.

.3 Containment fabric:

.1 Fibre mesh: woven polypropylene or fused polypropylene netting.

.4 Air/vapour barrier patch: self-adhesive patch, sized to overlap opening by 50 mm, all sides.

.1 Acceptable Product: Siga Sicrall 170

.5 Air/vapour barrier: Refer to Section 06 10 53 – Miscellaneous Rough Carpentry.

.6 Air/vapour barrier joint sealing: Refer to Section 07 25 00 – Weather Barriers.

Part 3 Execution

3.1 EXAMINATION

.1 Verification of Conditions: verify that conditions of substrate previously installed under other Sections or Contracts are acceptable for loose fill insulation application in accordance with manufacturer's written instructions.

3.2 LOOSE FIBRE INSTALLATION

.1 Pneumatically place loose fibre insulation above ceiling between trusses to provide minimum thermal resistance value RSI as indicated.

.2 Ensure roof areas exposed to outside air are insulated.

.3 Ensure unobstructed air circulation to eave vents.

.4 Install baffles to prevent insulation from spilling over top of exterior wall and causing blockage of soffit vents, and to prevent displacement of insulation by wind entering vents.

.5 Keep insulation minimum 75 mm from heat emitting devices and recessed light fixtures, and minimum 50 mm from sidewalls of chimneys and vents.

3.3 LOOSE FIBRE VERTICAL INSTALLATION: MESH SYSTEM

.1 Install fibre mesh containment fabric over studs.

.2 Cut holes in fibre mesh at top of wall, and where required, for insertion of pneumatic insulation delivery hose.

.3 Pneumatically place loose fibre insulation in walls, starting at top of wall or just below horizontal blocking, successively between studs to provide minimum thermal resistance value of RSI 0.0265/mm and minimum density of 48 kg/m.

.4 Ensure wall areas exposed to outside air are insulated.

.5 Apply air/vapour barrier, in accordance with Section 06 10 53 – Miscellaneous Rough Carpentry once insulation installation is complete.

.6 Seal air/vapour retarder joints and edges in accordance with Section 07 25 00 – Weather Barriers.

3.4 CLEANING

.1 Cleaning: clean in accordance with Section 01 11 55 – General Instructions.

END OF SECTION

Part 1 General

1.1 SECTION INCLUDES

.1 Vapour Retarders

.2 Weather Barriers

.3 Joint Sealing Tapes

1.2 RELATED REQUIREMENTS

.1 Section 06 10 53 – Miscellaneous Rough Carpentry: OSB air barrier and vapour retarder

1.3 REFERENCES

.1 Canadian General Standards Board (CGSB)

.1 CAN/CGSB-51.34-M86, Vapour Barrier, Polyethylene Sheet, for Use in Building Construction.

.2 Sealant and Waterproofer's Institute - Sealant and Caulking Guide Specification.

1.4 ACTION AND INFORMATIONAL SUBMITTALS

.1 Provide submittals in accordance with Section 01 33 00 - Submittal Procedures.

.2 Product Data:

.1 Submit manufacturer's printed product literature, specifications and datasheet and include product characteristics, performance criteria, physical size, finish and limitations.

1.5 QUALITY ASSURANCE

.1 Mock-Up:

.1 Construct mock-up in accordance with Section 01 11 55 – General Instructions.

.2 Construct typical interior wall panel, 3 m long by 4.2 m high, incorporating window frame and sill, insulation, building corner condition, junction with roof system; illustrating materials interface and seals.

.3 Locate where directed.

.4 Mock-up may remain as part of finished work.

.5 Allow 24 hours for inspection of mock-up by Departmental Representative before proceeding with air/vapour barrier Work.

1.6 DELIVERY, STORAGE AND HANDLING

.1 Deliver, store and handle materials in accordance with manufacturer's written instructions.

1.7 WASTE MANAGEMENT AND DISPOSAL

.1 Separate waste materials for recycling in accordance with Section 01 74 21 - Construction/Demolition Waste Management and Disposal].

.2 Place materials defined as hazardous or toxic waste in designated containers.

.3 Ensure emptied containers are sealed and stored safely for disposal away from children.

1.8 AMBIENT CONDITIONS

.1 Install solvent curing sealants and vapour release adhesive materials in open spaces with ventilation.

.2 Maintain temperature and humidity recommended by materials manufactures before, during and after installation.

1.9 SEQUENCING

.1 Sequence work to permit installation of materials in conjunction with related materials and seals.

1.10 WARRANTY

.1 For air barrier products the 12 months warranty period is extended to 24months.

.2 Warranty: include coverage of installed products which:

.1 Fail to achieve air tight and watertight seal.

.2 Exhibit loss of adhesion or cohesion.

Part 2 Products

2.1 SHEET VAPOUR RETARDER

.1 Under slab: polyethylene film: to CAN/CGSB-51.34, 0.25 mm thick.

2.2 INTERIOR AIR/VAPOUR BARRIER

.1 OSB Sheet: Refer to Section 06 10 53 – Miscellaneous Rough Carpentry.

2.3 WEATHER BARRIER

.1 Insulating Wood Fiber Board: Refer to Section 06 10 53 – Miscellaneous Rough Carpentry.

2.4 JOINT SEALING TAPES

.1 Polyethylene Film: air resistant pressure sensitive adhesive tape, 100 mm wide. To ASTM E1643.

.1 Acceptable Product: Perminator Tape by WR Meadows.

.2 Air Barrier and Vapour Retarder: high performance air and vapour resistant pressure sensitive polyethylene adhesive tape for permanent airtight bonding, 100 or 150 mm wide to provide minimum 50mm laps. Maximum vapour permeability of 1 perm. Provide manufacturer recommended primer for sealing to concrete slab.

.1 Acceptable Products:

.1 SIGA Rissan 100 and 150 with Dockskin Primer.

.2 Pro Clima Tescon Vana with Tescon Primer.

.3 Window and Door Frame Air Sealing: high performance air and vapour resistant pressure sensitive polyethylene adhesive tape for permanent airtight bonding, 100 or 150mm wide to provide minimum 50mm laps. Maximum vapour permeability of 1 perm. Pre-folded for sealing inside corners.

.1 Acceptable Products:

.1 SIGA Fentrim IS 20

.2 Pro Clima Contega Solido SL-D (Interior) and Exo-D (Exterior)

.4 Window Sill Waterproofing: high performance air and watertight pressure sensitive recommended by manufacturer to create self-sealing sill flashings.

.1 Acceptable products:

.1 SIGA Wigluv. Width to suit application.

.2 Pro Clima Extoseal Encors

.5 Weather Barrier: High performance semi-permeable air resistant pressure sensitive acrylic reinforced polyolefin adhesive tape for permanent bonding. Minimum vapour permeability of 1 perm.

.1 Acceptable Products:

.1 SIGA Wigluv. Width to suit application. Primer/adhesive as required.

.2 Pro Clima Tescon Vana. Primer/adhesive as required.

2.5 SEALANTS

.1 Sealants in accordance with Section 07 92 00 - Joint Sealants.

.2 Polyethylene film sealant: As recommended by manufacturer.

2.6 ACCESSORIES

.1 Moulded box vapour barrier: factory-moulded polyethylene box for use with recessed electric switch and outlet device boxes. Required where electrical boxes penetrate air barrier.

Part 3 Execution

3.1 MANUFACTURER'S INSTRUCTIONS

.1 Compliance: comply with manufacturer's written recommendations or specifications, including product technical bulletins, handling, storage and installation instructions, and datasheets.

3.2 EXAMINATION

.1 Verify that surfaces and conditions are ready to accept work of this section.

.2 Ensure surfaces are clean, dry, sound, smooth, continuous and comply with manufacturer's requirements.

.3 Report unsatisfactory conditions Departmental Representative in writing.

.4 Do not start work until deficiencies have been corrected.

.1 Beginning of Work implies acceptance of conditions.

3.3 PREPARATION

.1 Remove loose or foreign matter, which might impair adhesion of materials.

.2 Ensure substrates are clean of oil or excess dust; masonry joints struck flush, and open joints filled; and concrete surfaces free of large voids, spalled areas or sharp protrusions.

.3 Ensure substrates are free of surface moisture prior to application of self-adhesive tapes and primer.

.4 Ensure metal closures are free of sharp edges and burrs.

.5 Prime substrate surfaces to receive tapes in accordance with manufacturer's instructions.

3.4 INSTALLATION – SHEET VAPOUR RETARDER

.1 Ensure services are installed and inspected prior to installation of retarder.

.2 Install sheet vapour retarder on warm side of exterior floor assemblies prior to placement of concrete to form continuous retarder.

.3 Use sheets of largest practical size to minimize joints.

.4 Inspect for continuity. Repair punctures and tears with sealing tape before work is concealed.

.5 Cut sheet vapour retarder to form openings for penetrations and ensure material is lapped and sealed to penetrating component.

.6 Seal perimeter of sheet vapour barrier as follows:

.1 Apply continuous bead of sealant to substrate at perimeter of sheets.

.2 Lap sheet over sealant and press into sealant bead.

.3 Ensure that no gaps exist in sealant bead. Smooth out folds and ripples occurring in sheet over sealant.

.7 Seal lap joints of sheet vapour barrier as follows:

.1 Attach first sheet to substrate.

.2 Apply continuous bead of sealant over solid backing at joint.

.3 Lap adjoining sheet minimum 150 mm and press into sealant bead.

.4 Ensure that no gaps exist in sealant bead. Smooth out folds and ripples occurring in sheet over sealant.

3.5 INSTALLATION – AIR BARRIER & VAPOUR RETARDER

.1 Install materials in accordance with manufacturer's instructions.

.2 Apply sealant within recommended application temperature ranges.

.1 Consult manufacturer when sealant cannot be applied within these temperature ranges.

.3 Electrical Boxes (if penetrating interior air barrier):

.1 Seal electrical switch and outlet device boxes that penetrate air and vapour retarder as follows:

.1 Install moulded box vapour barrier.

.2 Apply joint sealant tape to seal edges of flange to main air barrier and vapour retarder and seal wiring penetrations through box cover.

3.6 CLEANING

.1 Proceed in accordance with Section 01 11 55 – General Instructions.

.2 On completion and verification of performance of installation, remove surplus materials, excess materials, rubbish, tools and equipment.

3.7 PROTECTION OF WORK

.1 Protect finished work in accordance with Section 01 11 55 – General Instructions.

.2 Do not permit adjacent work to damage work of this section.

.3 Ensure finished work is protected from climatic conditions.

END OF SECTION

Part 1 General

1.1 RELATED REQUIREMENTS

.1 Section 06 10 00 –Rough Carpentry: Wood strapping.

.2 Section 07 05 00 – Common Work Results for Thermal and Moisture Protection: Common requirements for all Division 7 work.

.3 Section 07 25 00 – Weather Barriers: Weather barrier membrane.

.4 Section 07 62 00 – Sheet Metal Flashing and Trim

.5 Section 07 92 00 – Joint Sealants

1.2 REFERENCE STANDARDS

.1 American Society of Mechanical Engineers (ASME)

.1 ASME B18.6.3-2013, Machine Screws, Tapping Screws, and Metallic Drive Screws (Inch Series).

.2 ASTM International

.1 ASTM A653/A653M-15e1, Standard Specification for Steel Sheet, Zinc-Coated (Galvanized) or Zinc-Iron Alloy-Coated (Galvannealed) by the Hot-Dip Process.

.2 ASTM D2369-10–2015e1, Test Method for Volatile Content of Coatings.

.3 ASTM D2832-92(2016), Standard Guide for Determining Volatile and Nonvolatile Content of Paint and Related Coatings.

.4 ASTM D5116-10, Standard Guide For Small-Scale Environmental Chamber Determinations of Organic Emissions From Indoor Materials/Products.

.3 CSA Group

.1 CSA B111-1974(R2003), Wire Nails, Spikes and Staples.

1.3 ACTION AND INFORMATIONAL SUBMITTALS

.1 Submit in accordance with Section 01 33 00- Submittal Procedures.

.2 Product Data:

.1 Submit manufacturer's instructions, printed product literature and data sheets for metal siding and include product characteristics, performance criteria, physical size, finish and limitations.

.2 Submit 2 copies of WHMIS MSDS in accordance with Section 01 35 29 - Health and Safety Requirements.

.3 Shop Drawings:

.1 Indicate dimensions, profiles, attachment methods, schedule of wall elevations, trim and closure pieces, and related work.

.4 Samples:

.1 Submit duplicate metal siding samples.

1.4 CLOSEOUT SUBMITTALS

.1 Submit in accordance with Section 01 78 00- Closeout Submittals.

.2 Operation and Maintenance Data: submit operation and maintenance data for installed products for incorporation into manual.

.3 Warranty Documentation: submit warranty documents specified.

1.5 QUALITY ASSURANCE

.1 Test Reports: submit certified test reports showing compliance with specified performance characteristics and physical properties.

.2 Certificates: submit product certificates signed by manufacturer certifying materials comply with specified performance characteristics and criteria and physical requirements.

.3 Mock-Up:

.1 Provide site mock-up for work of this Section indicating methods and materials, and procedures proposed to achieve final results, and to comply with following requirements, using materials indicated for completed work:

.1 Obtain Departmental Representative's acceptance of mock-ups before starting construction; mock-up used throughout construction period as standard of acceptance for subsequent work.

.2 Mock-up may form part of permanent structure when accepted by Departmental Representative; repair or replace unacceptable mock-ups at no additional cost to Owner.

1.6 DELIVERY, STORAGE AND HANDLING

.1 Deliver, store and handle materials in accordance with Section 01 61 00- Common Product Requirements and with manufacturer's written instructions.

.2 Delivery and Acceptance Requirements: deliver materials to site in original factory packaging, labelled with manufacturer's name and address.

.3 Storage and Handling Requirements:

.1 Store materials in dry location and in accordance with manufacturer's recommendations in clean, dry, well-ventilated area.

.2 Store and protect steel siding from nicks, scratches, and blemishes.

.3 Replace defective or damaged materials with new.

1.7 SITE CONDITIONS

.1 Execute work of this Section within environmental conditions (temperature, humidity, and ventilation) within limits recommended by manufacturer.

1.8 WARRANTY

.1 Manufacturer's warranty: Submit, for Departmental Representative's acceptance, manufacturer's standard warranty document executed by authorized company official. Manufacturer's warranty in addition to and not limit other rights Owner may have under Contract Documents.

Part 2 Products

2.1 MATERIALS

.1 Steel siding: Fabricated from commercial grade to ASTM A652M with Z275 zinc coating:

.1 Profile: vertical, 22mm (7/8") corrugated

.2 Pattern: smooth surface.

.3 Finish coating: factory precoated with modified silicone paint finish, 2 coat system dry paint film thickness of 0.025 mm.

.4 Colour: colour selected by Departmental Representative from manufacturer's standard colours.

.5 Thickness: 0.76 mm (22 gauge) base metal thickness.

.2 Fasteners: gasketted screws to ASME B18.6.3, galvanized steel, colour matched to siding purpose made.

.3 Sealants: in accordance with Section 07 92 00- Joint Sealants.

.4 Exterior wall sheathing paper: in accordance with Section 07 25 00 – Weather Barriers.

2.2 ACCESSORIES

.1 Exposed trim: inside corners, outside corners, cap strip, drip cap, undersill trim, starter strip and window/door trim of same material, gloss, colour as cladding, with fastener holes pre-punched.

.2 Flashings: In accordance with Section 07 62 00 – Sheet Metal Flashing and Trim.

.3 Insect Screen: Black fiberglass screen.

Part 3 Execution

3.1 EXAMINATION

.1 Verification of Conditions: verify conditions of substrate previously installed under other Sections or Contracts acceptable in accordance with manufacturer's written instructions.

3.2 PREPARATION

.1 Clean surfaces thoroughly prior to installation.

.2 Repair substrate flaws or defects before applying siding or soffits.

.3 Fur surfaces to even plane and free from obstructions.

.4 Prepare surfaces using methods recommended by manufacturer for achieving best result for substrate under project conditions.

3.3 MANUFACTURER'S INSTRUCTIONS

.1 Compliance: comply with manufacturer's written data, including product technical bulletins, product catalogue installation instructions, product carton installation instructions, and data sheets.

3.4 INSTALLATION

.1 Install steel siding in accordance with manufacturer's written instructions.

.2 Install exterior wall sheathing paper in accordance with Section 07 25 00 – Weather Barriers.

.3 Install continuous starter strips, inside and outside corners, edgings, soffit, drip, cap, sill and window/door opening flashings as indicated.

.4 Install outside corners, fillers and closure strips with carefully formed and profiled work.

.5 Install soffit and fascia cladding as indicated.

.6 Maintain joints in exterior cladding, true to line, tight fitting, hairline joints.

.7 Attach components in manner not restricting thermal movement.

.8 Caulk junctions with adjoining work with sealant. Do work in accordance with Section 07 92 00- Joint Sealants.

3.5 CLEANING

.1 Progress Cleaning: clean in accordance with Section 01 74 11- Cleaning.

.1 Leave Work area clean at end of each day.

.2 Final Cleaning: upon completion remove surplus materials, rubbish, tools and equipment in accordance with Section 01 74 11- Cleaning.

3.6 PROTECTION

.1 Protect installed products and components from damage during construction.

.2 Repair damage to adjacent materials caused by preformed metal siding installation.

END OF SECTION

Part 1 General

1.1 SECTION INCLUDES

.1 Fiber cement panels for closed joint systems.

.2 Accessories and trim.

1.2 RELATED REQUIREMENTS

.1 Section 06 10 00 – Rough Carpentry.

.2 Section 07 21 13 – Board Insulation.

.3 Section 07 25 00 – Weather Barrier.

.4 Section 07 62 00 – Sheet Metal Flashing and Trim.

.5 Section 07 92 00 – Joint Sealers.

1.3 REFERENCES

.1 ASTM International

.1 ASTM A653/A653M-11, Standard Specification for Steel Sheet, Zinc-Coated (Galvanized) or Zinc-Iron Alloy-Coated (Galvannealed) by the Hot-Dip Process.

.2 ASTM C 1185-99 - Standard Test Methods for Sampling and Testing Non-Asbestos Fiber-Cement Flat Sheet, Roofing and Siding Shingles, and Clapboards.

.3 ASTM C 1186-99 - Standard Specification for Flat Non-Asbestos Fiber Cement Sheets.

.4 ASTM E96/E96M-10, Standard Test Methods for Water Vapor Transmission of Materials.

.2 Canadian General Standards Board (CGSB)

.1 CGSB 41-GP-6M-83, Sheets, Thermosetting Polyester Plastics, Glass Fibre Reinforced.

.3 Department of Justice Canada (Jus)

.1 Canadian Environmental Protection Act (CEPA), 1999 (R2008)

.4 Health Canada/Workplace Hazardous Materials Information System (WHMIS)

.1 Material Safety Data Sheets (MSDS).

.5 Transport Canada (TC)

.1 Transportation of Dangerous Goods Act (TDGA), 1992.

1.4 ACTION AND INFORMATIONAL SUBMITTALS

.1 Submit in accordance with Section 01 33 00 - Submittal Procedures.

.2 Product Data:

.1 Submit manufacturer's instructions, printed product literature and data sheets for cementitious materials and include product characteristics, performance criteria, physical size, finish and limitations.

.2 Submit 2 copies of WHMIS MSDS in accordance with Section 01 35 29.06 - Health and Safety Requirements.

.3 Shop Drawings:

.1 Indicate dimensions, wall openings, head, jamb, sill and mullion detail, materials and finish, anchor details, compliance with design criteria and requirements of related work.

.4 Samples:

.1 Submit duplicate 100 x 100 mm samples of panel and trim material, representative of materials, finishes and colours.

1.5 QUALIFICATIONS

.1 Mock-ups: construct mock-ups in accordance with Section 01 45 00 – Quality Control and to requirements supplemented as follows:

.1 Provide mock-up for evaluation of workmanship.

.2 Co-ordinate type and location of mock-up with project requirements.

.3 Do not proceed with remaining work until workmanship are reviewed by the Departmental Representative.

1.6 DELIVERY, STORAGE AND HANDLING

.1 Deliver, store and handle materials in accordance with Section 01 61 00 - Common Product Requirements and with manufacturer's written instructions.

.2 Delivery and Acceptance Requirements: deliver materials to site in original factory packaging, labelled with manufacturer's name and address.

.3 Storage and Handling Requirements:

.1 Store materials in dry location and in accordance with manufacturer's recommendations in clean, dry, well-ventilated area.

.2 Store and protect cementitious panels from nicks, scratches, and blemishes.

.3 Replace defective or damaged materials with new.

1.7 ENVIRONMENTAL REQUIREMENTS

.1 Comply with requirements of Workplace Hazardous Materials Information System (WHMIS) regarding use, handling, storage, and disposal of hazardous materials; and regarding labelling and provision of material safety data sheets (MSDS) acceptable to Labour Canada.

Part 2 Products

2.1 FIBER CEMENT BOARD PANELS

.1 Horizontal Lap Siding: Cellulose fiber reinforced concrete siding with the following characteristics:

- .1 Width: 133 mm wide
- .2 Length: 3657 mm
- .3 Thickness: 8 mm
- .4 Style: Cedar lap.
- .5 Finish: Factory applied Rustic Series stain finishing system by WoodTone.
- .6 Colour: Selected by Departmental Representative from Manufacturer's standard colours.
- .7 Standard of Acceptance: Allura Vertical Siding Fiber Cement Boards as manufactured by Plycem (Certainteed).

.2 Soffit Panels: Cellulose fiber reinforced concrete panels with the following characteristics:

- .1 Size: 1220 mm x 2440 mm x 6mm
- .2 Style: Cedar soffit panel, no grooves.
- .3 Finish: Factory applied Rustic Series stain finishing system by WoodTone.
- .4 Colour: Selected by Departmental Representative from Manufacturer's standard colours.
- .5 Standard of Acceptance: Allura Cedar Sofit Fiber Cement Boards as manufactured by Plycem (Certainteed).

.3 Battens/Trim:

- .1 Thickness: 1" (5/4)
- .2 Width: 3-1/2"
- .3 Style: Woodgrain.
- .4 Finish: Factory applied Rustic Series stain finishing system by WoodTone.
- .5 Colour: Selected by Departmental Representative from Manufacturer's standard colours.
- .6 Standard of Acceptance: Plycem Trim (Certainteed).

2.2 ACCESSORIES

.1 Trims: All trims to be prefinished metal j-trims. Refer to Section 07 62 00 – Sheet Metal Flashing and Trim.

.2 Fasteners: Hot dipped galvanized nails to penetrate 32mm into wood strapping/insulated sheathing

.3 Strapping/Furring: Refer to Section 06 10 53 – Miscellaneous Rough Carpentry.

.4 Air/Weather Barrier: Refer to Section 07 27 00 –Weather Barriers.

.5 Sealants: one-component, silicone base, solvent curing, colour to match panels.

.6 Insect/vermin screen: black fiberglass insect screen.

Part 3 Execution

3.1 EXAMINATION

.1 Verification of Conditions: verify that conditions of substrate previously installed under other Sections or Contracts are acceptable in accordance with manufacturer's written instructions.

3.2 PREPARATION

.1 Clean surfaces thoroughly prior to installation.

.2 Prepare surfaces using the methods recommended by the manufacturer for achieving the best result for the substrate under the project conditions.

.3 Furring: Refer to Section 06 10 00 – Rough Carpentry.

3.3 INSTALLATION

.1 Install in accordance with manufacturer's instructions and approved submittals. Touch up building framing members with primer as required.

.2 Comply with manufacturer's recommendations for fastener spacing.

3.4 EXTERIOR CLADDING FOR CLOSED JOINT RAINSCREEN APPLICATION

.1 Allow space between both ends of siding panels that butt against trim for thermal movement; seal joint between panels and trim with sealant.

.2 Avoid joints in lap siding except at corners; where joints are inevitable stagger joints between successive courses.

.3 Leave space at top and bottom open; top may be behind soffit; at bottom install perforated insect screen over opening by wrapping a strip of screen over bottom ends of vertical furring strips.

.4 Install sheet metal flashing above door and window casings.

.5 After installation, seal all joints. Seal around all penetrations. Paint all exposed cut edges.

3.5 CLEANING

.1 Clean in accordance with Section 01 11 55 – General Instructions.

3.6 PROTECTION

.1 Protect installed products and components from damage during construction.

.2 Repair damage to adjacent materials caused by mineral fibre reinforced panel installation.

END OF SECTION

Part 1 General

1.1 RELATED REQUIREMENTS

.1 Section 06 10 53 – Miscellaneous Rough Carpentry: Plywood sheathing

.2 Section 07 62 00 – Sheet Metal Flashing and Trim: All roof flashings.

.3 Section 07 72 53 – Snow Guards.

1.2 REFERENCE STANDARDS

.1 ASTM International

.1 ASTM A653/A653M-10, Standard Specification for Steel Sheet, Zinc-Coated (Galvanized) or Zinc-Iron Alloy-Coated (Galvannealed) by the Hot-Dip Process.

.2 ASTM A792/A792M-10, Standard Specification for Steel Sheet, 55% Aluminum-Zinc Alloy-Coated by the Hot Dip Process.

.3 ASTM D523-89(2008), Standard Test Method for Specular Gloss.

.4 ASTM D822-01(R2006), Standard Practice for Filtered Open-Flame Carbon-Arc Exposures of Paint and Related Coatings.

.2 Canadian General Standards Board (CGSB)

.1 CAN/CGSB-37.5-M89, Cutback Asphalt Plastic Cement.

.2 CAN/CGSB-37.29-M89, Rubber-Asphalt Sealing Compound.

.3 Canadian Sheet Steel Building Institute (CSSBI)

.1 CSSBI 10M-08, Standard for Steel Roof Deck

.2 CSSBI 20M-08, Standard for Sheet Steel Cladding for Architectural, Industrial, and Commercial Building Applications.

.4 Canadian Standards Association

.1 CSA S136-16, North American Specification for the Design of Cold-Formed Steel Structural Members.

.5 Department of Justice Canada (Jus)

.1 Canadian Environmental Protection Act (CEPA), 1999.

.6 Health Canada/Workplace Hazardous Materials Information System (WHMIS)

.1 Material Safety Data Sheets (MSDS).

.7 National Building Code of Canada 2015 (NBC).

.1 CCMC- Registry of Product Evaluations.

.8 Transport Canada (TC)

.1 Transportation of Dangerous Goods Act (TDGA), 1992.

1.3 DESIGN REQUIREMENTS

.1 Design roof system to resist:

.1 Snow loads and snow build-up and rain load, expected in this geographical region NBCC climatic data, 50 year probability: 2.2 kPa (S_s) and 0.1 kPa (S_r)

.2 Wind loads, positive and negative, expected in this geographical region NBCC climatic data, 50 year probability: 0.34 kPa

.3 Dead load of roof system.

.2 Deflection of the roof system is not to exceed 1/240thof the span for the specified live loading.

.3 Thermal Movements: Allow for thermal movements from ambient and surface temperature changes by preventing buckling, overstressing of components, failure of connections, and other detrimental effects. Base calculations on surface temperatures of materials due to both solar heat gain and nighttime sky heat loss.

.1 Temperature Change (Range): 20 deg C, ambient; 40 deg C, material surfaces

1.4 ACTION AND INFORMATIONAL SUBMITTALS

.1 Submit in accordance with Section 01 33 00- Submittal Procedures.

.2 Product Data:

.1 Submit manufacturer's instructions, printed product literature and data sheets for sheet metal roofing and include product characteristics, performance criteria, physical size, finish and limitations.

.2 Proof of manufacturer's CCMC listing and listing number.

.3 Submit 2 copies of WHMIS MSDS in accordance with Section 01 35 29- Health and Safety Requirements.

.3 Samples:

.1 Submit duplicate 300 x 300 mm samples of each sheet metal material.

1.5 QUALITY ASSURANCE

.1 Provide a manufacturer’s written warranty: Furnish panel manufacturer’s written warranty covering failure of factory-applied exterior finish within the warranty period. Warranty period for finish: 40 years after the date of Substantial Completion.

1.6 DELIVERY, STORAGE AND HANDLING

.1 Deliver, store and handle materials in accordance with Section 01 61 00- Common Product Requirements and with manufacturer's written instructions.

.2 Delivery and Acceptance Requirements: deliver materials to site in original factory packaging, labelled with manufacturer's name and address.

.3 Storage and Handling Requirements:

.1 Store materials in dry location and in accordance with manufacturer's recommendations in clean, dry, well-ventilated area.

.2 Store and protect sheet metal roofing from nicks, scratches, and blemishes.

.3 Replace defective or damaged materials with new.

Part 2 Products

2.1 SHEET METAL MATERIALS

.1 Zinc coated steel sheet: to ASTM A653/A653M, commercial quality, with Z275 coating, extra smooth surface, prefinished as specified in 2.2.

2.2 PREFINISHED STEEL SHEET

.1 Prefinished steel with factory applied silicone modified polyester.

.1 Colour: Selected by Departmental Representative from manufacturer's standard range

.2 Specular gloss: 30 units +/-5 to ASTM D523.

.3 Coating thickness: 25 micrometres minimum.

.4 Resistance to accelerated weathering for chalk rating of 8, colour fade 5 units or less and erosion rate less than 20 % to ASTM D822 as follows:

.1 Outdoor exposure period 1000 hours minimum.

.2 Humidity resistance exposure period 1000 hours minimum.

2.3 ROOF PANELS

.1 Batten-style snap-on (nail strip) standing seam roofing:

.1 Batten height: 25 mm minimum

.2 Panel width: 406 mm.

.3 Trims: Colour matched.

.4 Colour: As selected by Departmental Representative from manufacturer’s standard colours.

.5 Material: Prefinished steel sheet.

.6 Fasteners: concealed

.7 Acceptable Products:

.1 Prestige by Vicwest

.2 Prolok by Westform.

.3 Snap-Lok by Westman

2.4 ACCESSORIES

.1 Isolation coating: alkali resistant bituminous paint.

.2 Plastic cement: to CAN/CGSB-37.5.

.3 Underlayment: Synthetic or self-adhered high-temperature underlayment intended for metal roofs with the following minimum performance specifications:

.1 Tensile Strength: ≥ 20kN/m to ASTM E96-00.

.2 Water Transmission: Pass to ASTM D4869.

.3 Water Absorption: ≤ 0.1% to ASTM D1970.

.4 UV Exposure: ≥ 6 months to ASTM G90

.5 Acceptable Products:

.1 Henry Blueskin: Roof High Temp Roof Underlayment

.2 Soprema: Lastobond Shield HT

.3 Vicwest: Self-Adhered HT Underlayment

.4 2-ply SBS membrane: to CGSB 37-GP-56M.

.1 Styrene-Butadiene-Styrene (SBS) elastomeric polymer prefabricated sheet with composite reinforcement.

.2 Fully-adhered or mechanically fastened.

.3 Plain Surface for base sheet and granulated for cap sheet.

.5 Sealant: Section 07 92 00 - Joint Sealants.

.6 Rubber-asphalt sealing compound: to CAN/CGSB-37.29.

.7 Closures: Metal closures to suit profiles selected, to manufacturer's recommendations.

.8 Cleats: of same material, and temper as sheet metal: 50 mm minimum wide.

.1 Thickness: same as sheet metal being secured.

.9 Fasteners: concealed

.10 Washers: of same material as sheet metal, 1 mm thick with rubber packings.

.11 Touch-up paint: as recommended by sheet metal roofing manufacturer.

2.5 FABRICATION

.1 Fabricate roof components to comply with dimensions, profiles, gauges and details as shown on the shop drawings, including fascia and soffit panels and all companion flashing.

.2 Fabricate all components of the system in the factory, ready for field installation.

.3 Panel Lengths: Fabricate panels in one continuous length.

.4 Hem exposed edges on underside 12 mm, mitre and seal.

.5 Form sections square, true and accurate to size, free from distortion and other defects detrimental to appearance or performance.

.6 Apply minimum 0.2 mm dry film thickness coat of plastic cement to both faces of dissimilar metals in contact.

Part 3 Execution

3.1 EXAMINATION

.1 Verification of Conditions: verify that conditions of substrate previously installed under other Sections or Contracts are acceptable for sheet metal roofing installation in accordance with manufacturer's written instructions.

3.2 INSTALLATION

.1 Roof Materials:

.1 Membranes: Install to solid substrate according to manufacturer's recommendations. Ensure all joints are properly lapped and sealed. Tie in with barriers on adjacent surfaces to ensure watertight construction. Provide a continuous seal around all openings in the roof system.

.2 Roof Panel Installation:

.1 Install in accordance with manufacturer’s instructions and as necessary to achieve specified performance and a leak-free Installation. Allow for structural and thermal movement.

.2 Separate dissimilar metals using bituminous coating to prevent galvanic action.

.3 Use fasteners recommended by panel manufacturer.

.4 Conceal fasteners on batten-style roofing except where approved in writing by Departmental Representative before installation.

.5 Provide notched and formed closures, sealed against weather penetration, at changes in pitch, and at ridges and eaves, where required.

.6 Install all companion flashing as shown on the shop drawings. Use concealed fasteners when possible. Exposed fasteners to match colour of roof sheet.

3.3 CLEANING

.1 Progress Cleaning: clean in accordance with Section 01 11 55 – General Instructions.

.1 Leave Work area clean at end of each day.

3.4 PROTECTION

.1 Protect installed products and components from damage during construction.

.2 Repair damage to adjacent materials caused by sheet metal roofing installation.

END OF SECTION

Part 1 General

1.1 RELATED REQUIREMENTS

.1 Section 07 46 19 – Steel Siding.

.2 Section 07 46 46 – Fiber-Cement Siding.

.3 Section 07 61 00 – Sheet Metal Roofing

.4 Section 07 92 00 - Joint Sealants.

1.2 REFERENCES

.1 American Society for Testing and Materials International (ASTM)

.1 ASTM A653/A653M-07, Standard Specification for Steel Sheet, Zinc-Coated (Galvanized) or Zinc-Iron Alloy-Coated (Galvannealed) by the Hot-Dip Process.

.2 ASTM A792/A792M-06a, Standard Specification for Steel Sheet, 55% Aluminum-Zinc Alloy-Coated by the Hot-Dip Process.

.3 ASTM D523-89(1999), Standard Test Method for Specular Gloss.

.2 Canadian Roofing Contractors Association (CRCA)

.1 Roofing Specifications Manual 1997.

.3 Canadian Standards Association (CSA International)

.1 CSA B111-1974(R2003), Wire Nails, Spikes and Staples.

.4 Health Canada/Workplace Hazardous Materials Information System (WHMIS)

.1 Material Safety Data Sheets (MSDS).

1.3 ACTION AND INFORMATIONAL SUBMITTALS

.1 Provide submittals in accordance with Section 01 33 00 - Submittal Procedures.

.2 Product Data:

.1 Submit manufacturer's printed product literature for sheet metal flashing systems materials, specifications and datasheet and include product characteristics, performance criteria, physical size, finish and limitations.

.2 Submit two copies WHMIS MSDS - Material Safety Data Sheets in accordance with Section 01 35 33 - Health and Safety Requirements.

.3 Samples:

.1 Submit duplicate 50 x 50 mm samples of each type of sheet metal material, finishes and colours.

1.4 QUALITY ASSURANCE

.1 Mock-Up:

.1 Build mock-ups for each type of flashing and counter flashing complete with all fasteners as per drawings and specifications and obtain Departmental Representative's approval prior to fabrication of any further metal flashings.

1.5 DELIVERY, STORAGE AND HANDLING

.1 Deliver, store and handle materials in accordance with Section 01 11 55 – General Instructions.

Part 2 Products

2.1 BASE SHEET METAL MATERIALS

.1 Provide sheet metal in base metal thickness specified. Where no thickness specified, provide base sheet metal in thickness recommended in SMACNA Architectural Sheet Metal Manual for type of item being fabricated, but not less than the thickness required by the authority having jurisdiction.

.2 Zinc coated steel sheet: Z275 designation zinc coating.

2.2 PREFINISHED STEEL SHEET

.1 Prefinished steel with factory applied polyvinylidene fluoride resin on specified steel sheet substrate conforming to ASTM A755.

.1 Finished one side with wash coat on back.

.2 Colours to be selected by Departmental Representative from manufacturer's standard range.

.3 Specular gloss: 25 units +/- in accordance with ASTM D523.

.4 Coating thickness: not less than 22 micrometres.

2.3 ACCESSORIES

.1 Isolation coating: alkali resistant bituminous paint.

.2 Plastic cement: to CAN/CGSB 37.5.

.3 High Temperature Underlayment Membrane: Self-adhering high temperature membrane complete with compatible primer and sealant.

.4 Sealants: Refer to Section 07 90 00 – Joint Protection.

.5 Cleats: of same material, and temper as sheet metal, minimum 50 mm wide. Thickness same as sheet metal being secured. Gauge shall be sufficient to retain the flashings in place.

.6 Fasteners: of same material as sheet metal, to CSA B111, ring thread flat head roofing nails of length and thickness suitable for metal flashing application Provide a minimum 25 mm penetration into substrate.

.7 Washers: of same material as sheet metal, 1 mm thick with rubber packings.

.8 Touch-up paint: as recommended by prefinished material manufacturer.

.9 Splash pads: precast concrete, 305 mm x 610 mm x 64 mm.

2.4 FABRICATION

.1 Metal flashing shall be as detailed, supplemented by recommendations of Canadian Roofing Contractors' Association Specifications and SMACNA architectural details.

.2 Fabricate metal flashings and other sheet metal work in accordance with applicable SMACNA, RCABC and CRCA S-lock and standing seam details and as indicated.

.3 Form pieces in 2400 mm maximum lengths.

.1 Make allowance for expansion at joints.

.4 All free edges of metal flashing shall be strengthened by a fold at least 6mm wide, set out slightly and presenting a straight line and a neat finish.

.5 End joints where adjacent lengths of metal flashing meet shall be made using an S-joint. This shall be executed by inserting the end of one coping length in a 25-mm deep S-joint formed in the end of the adjacent length in a full bed of caulking compound. Concealed portion of the S-joint shall extend 25 mm outwards and be nailed to the substrate. Face nailing of the joints will not be permitted.

.6 The metal shall be formed on a bending brake. Shaping, trimming and hand-seaming shall be done on the bench as far as is practicable with the proper sheet-metal working tools. The angle of the bends and the folds for interlocking the metal shall be made with full regard to expansion and contraction to avoid buckling or fullness in the metal after it is in service and to avoid damaging the surface of the metal.

.7 Form sections square, true and accurate to size, free from distortion and other defects detrimental to appearance or performance.

2.5 METAL FLASHINGS

.1 Form flashings, copings and fascias to profiles indicated of 0.45 mm (26 gauge) thick prefinished steel sheet metal.

2.6 EAVES TROUGHS AND DOWNPIPES

.1 Form scupper/conductor heads and downpipes from 22 gauge galvalume sheet metal.

.2 Sizes and profiles as indicated.

.3 Provide goosenecks, outlets, strainer baskets and necessary fastenings.

Part 3 Execution

3.1 MANUFACTURER'S INSTRUCTIONS

.1 Compliance: comply with manufacturer's written recommendations, including product technical bulletins, handling, storage and installation instructions, and datasheets.

3.2 INSTALLATION

.1 Provide underlay under sheet metal.

.1 Secure in place and lap joints 100 mm.

.2 Provide self-adhesive membrane to tie into adjacent assemblies.

.2 Install continuous starter strips where indicated or required to present a true, non-waving, leading edge. Anchor to back-up to provide rigid, secure installation.

.3 Corner joints where adjacent lengths of metal flashing meet shall be made using folded joints. Apply a continuous bead of sealant as an additional protection

.4 Lock end joints and caulk with sealant.

.5 Make all roof and sill areas watertight. Flash openings and other items projecting through roofing. Bend up flashing as required, fold and clip neatly and secure in straight lines free from wrinkles and undulations.

.6 Ensure wide girth flashings are adequately sloped to the inside of roof areas and do not pond water. Back-sloped flashings will be rejected by the Departmental Representative. Fastenings to be concealed and watertight. Carefully place, form and trim breaks. Bond and neutralize soldering.

.7 Construct internal and external mitres with properly shaped capping pieces.

.8 Slope all horizontal wall flashings 4% to exterior.

.9 Counter Flashings:

.1 Install counter flashings as soon as possible after membrane flashings are in place.

.2 Counter flashings shall have a folded, bottom-edge, stiffening break, where indicated, and shall extend up the vertical face of the wall or curb to height shown, then be turned into reglets or interlocked with cap flashings.

.10 Cap Flashings:

.1 Tops of walls, parapets, counter flashings and the like shall be cap flashed as detailed, after membrane and metal counter flashings are in place.

3.3 EAVES TROUGHS AND DOWNPIPES

.1 Install conductor head

.2 Install downpipes.

.1 Secure downpipes to wall with straps at 1800 mm on centre; minimum two straps per downpipe.

.3 Install splash pads as indicated.

3.4 CLEANING

.1 Proceed in accordance with Section 01 11 55 – General Instructions.

.2 On completion and verification of performance of installation, remove surplus materials, excess materials, rubbish, tools and equipment.

.3 Leave work areas clean, free from grease, finger marks and stains.

END OF SECTION

Part 1 General

1.1 SECTION INCLUDES

.1 Snow retention system for metal roofs.

1.2 RELATED REQUIREMENTS

.1 Section 07 61 00 – Sheet Metal Roofing

.2 Section 07 62 00 – Sheet Metal Flashing and Trim

1.3 REFERENCES

.1 Aluminum Association (AA) - Aluminum Standards and Data, 2003 Edition.

.1 American Society for Testing and Materials International, (ASTM)

.2 B85-03 - Standard Specification for Aluminum-Alloy Die Castings.

.1 B221-04a - Standard Specification for Aluminum and Aluminum-Alloy Extruded Bars, Rods, Wire, Profiles, and Tubes.

1.4 SYSTEM DESCRIPTION

.1 Attachment system to attach to metal roof as follows:

.1 With only minor dimpling of panel seams.

.2 Without penetrations through roof seams or panels.

.3 Without use of sealers or adhesives.

.4 Without voiding roof warranty

.2 Components

.1 Non-penetrating aluminum brackets, and aluminum rods with coupling system.

.2 Aluminum “ice flags” centered in the middle of the panel to prevent sliding ice. Use over pedestrian areas.

.3 Design Requirements

.1 Bracket spacing and loading is based on specific project design.

.2 Based on snow load, climatic conditions, length of roof panel and width of panel; multiple rows of snow guards may be needed.

.3 Loading: Design snow guard system to resist minimum in-service vector load determined based on vertical snow load.

.4 Factor of safety: Utilize a factor of safety ≥ 2 to determine allowable loads from ultimate tested clamp tensile load values.

1.5 SUBMITTALS

.1 Product data: Submit manufacturer's printed product literature, specifications and data sheet in accordance with Section 01 33 00 – Submittal Procedures.

.2 Shop Drawings:

.1 Submit shop drawings in accordance with Section 01 33 00 – Submittal Procedures.

.2 Show locations of snow guards on roof and attachment spacing.

.3 Manufacturer's Instructions:

.1 Submit manufacturer's installation instructions.

.4 Closeout Submittals:

.1 Provide maintenance data for hardware complete with pertinent details, spare parts lists and warnings against harmful maintenance materials and practices for incorporation into manual specified in 01 78 00 - Closeout Submittals.

1.6 QUALITY ASSURANCE

.1 Installer to be experienced in the installation of metal roofing and snow retention systems for a period of not less than 5 years in the area of the project.

1.7 DELIVERY, STORAGE AND HANDLING

.1 Inspect material upon delivery and order replacements for any missing or defective items. Keep material dry, covered and off the ground until installed.

Part 2 Products

2.1 CLAMPS & STRAPS

.1 Manufactured from 6061-T6 aluminum extrusions conforming to ASTM B221 or aluminum castings conforming to ASTM B85 and to AA Aluminum Standards.

.2 Set screws: 300 series stainless steel, 18-8 allow, 10mm diameter with round nose point.

2.2 CROSS-MEMBERS

.1 Manufactured from extruded 25 mm diameter aluminum rod with aluminum coupler at end joints to ensure alignment and structural continuity.

2.3 ICE AND SNOW CLIPS

.1 Aluminum, with rubber foot, minimum 75mm wide.

2.4 FINISH

.1 Powder coated finish to match metal roof colour.

Part 3 Execution

3.1 EXAMINATION

.1 Prior to beginning installation, verify that:

.1 Panel seaming is complete.

.2 Panel attachment is sufficient to withstand loads applied by snow guard system.

.3 Installation will not impede roof drainage.

.2 Prior to beginning installation, verify that:

.1 Roof attachment is sufficient to withstand loads applied by snow guard system.

.2 Installation will not impede roof drainage.

3.2 PREPARATION

.1 Clean areas to receive attachments; remove loose and foreign matter that could interfere with installation or performance.

3.3 INSTALLATION

.1 Install system in accordance with manufacturer's instructions and approved Shop Drawings

.2 Snow Retention Systems

.1 Place clamps at maximum 800 mm on center or as required by in-service loads.

.2 Place clamps in straight, aligned rows.

.3 Place both set screws on same side of clamp.

.4 Tighten set screws to manufacturer's recommended torque. Randomly test set screw torque using calibrated torque wrench.

.5 Install cross members through holes in clamps and posts.

.6 Install coupler at cross member end joints.

.7 Tighten set screws against cross members at all “E” clamp and post locations.

.8 Do not cantilever cross members more than 4 inches beyond last clamp at ends.

.9 Install one snow clip per panel between panel seams.

3.4 CLEANING

.1 Proceed in accordance with Section 01 11 55 – General Instructions.

.2 On completion and verification of performance of installation, remove surplus materials, excess materials, rubbish, tools and equipment.

.3 Leave work areas clean, free from grease, finger marks and stains.

END OF SECTION

Part 1 General

1.1 SUMMARY

.1 This Section specifies caulking and sealants not specified in other Sections.

.2 Refer to other Sections for other caulking and sealants.

.3 Supply all labour, materials and equipment necessary to complete all caulking and sealing of exterior and interior joints where shown on the drawings and as specified herein.

1.2 RELATED SECTIONS

.1 Section 07 05 00 – Common Work Results for Thermal and Moisture Protection.

1.3 REFERENCES

.1 ASTM International

.1 ASTM C919-08, Standard Practice for Use of Sealants in Acoustical Applications.

.2 Canadian General Standards Board (CGSB)

.1 CGSB 19-GP-5M-1984, Sealing Compound, One Component, Acrylic Base, Solvent Curing (Issue of 1976 reaffirmed, incorporating Amendment No. 1).

.2 CAN/CGSB-19.13-M87, Sealing Compound, One-component, Elastomeric, Chemical Curing.

.3 CGSB 19-GP-14M-1984, Sealing Compound, One Component, Butyl-Polyisobutylene Polymer Base, Solvent Curing (Reaffirmation of April 1976).

.4 CAN/CGSB-19.17-M90, One-Component Acrylic Emulsion Base Sealing Compound.

.5 CAN/CGSB-19.24-M90, Multi-component, Chemical Curing Sealing Compound.

.3 General Services Administration (GSA) - Federal Specifications (FS)

.1 FS-SS-S-200-E(2)1993, Sealants, Joint, Two-Component, Jet-Blast-Resistant, Cold Applied, for Portland Cement Concrete Pavement.

.4 Health Canada/Workplace Hazardous Materials Information System (WHMIS)

.1 Material Safety Data Sheets (MSDS).

1.4 ACTION AND INFORMATIONAL SUBMITTALS

.1 Submit in accordance with Section 01 33 00 - Submittal Procedures.

.2 Product Data:

.1 Submit manufacturer's instructions, printed product literature and data sheets for joint sealants and include product characteristics, performance criteria, physical size, finish and limitations.

.2 Manufacturer's product to describe:

.1 Caulking compound.

.2 Primers.

.3 Sealing compound, each type, including compatibility when different sealants are in contact with each other.

.3 Submit 2 copies of WHMIS MSDS in accordance with Section 01 35 29.06 - Health and Safety Requirements.

.3 Manufacturer's Instructions:

.1 Submit instructions to include installation instructions for each product used.

1.5 CLOSEOUT SUBMITTALS

.1 Submit in accordance with Section 01 78 00 - Closeout Submittals.

.2 Operation and Maintenance Data: submit operation and maintenance data for incorporation into manual.

1.6 SITE CONDITIONS

.1 Ambient Conditions:

.1 Proceed with installation of joint sealants only when:

.1 Ambient and substrate temperature conditions are within limits permitted by joint sealant manufacturer or are above 4.4 degrees C.

.2 Joint substrates are dry.

.3 Conform to manufacturer's recommended temperatures, relative humidity, and substrate moisture content for application and curing of sealants including special conditions governing use.

.2 Joint-Width Conditions:

.1 Proceed with installation of joint sealants only where joint widths are more than those allowed by joint sealant manufacturer for applications indicated.

.3 Joint-Substrate Conditions:

.1 Proceed with installation of joint sealants only after contaminants capable of interfering with adhesion are removed from joint substrates.

1.7 QUALIFICATIONS OF APPLICATOR

.1 Caulking installation to be performed by workmen thoroughly skilled and specially trained in the techniques of caulking and who are completely familiar with the published recommendations of the manufacturer of the caulking material to be used.

.2 Indication of lack of skill on the part of caulking applicators will be sufficient grounds for the Departmental Representative to reject installed caulking and to require its immediate removal and complete re-caulking at no extra cost to the contract price.

1.8 ENVIRONMENTAL REQUIREMENTS

.1 Comply with requirements of Workplace Hazardous Materials Information System (WHMIS) regarding use, handling, storage, and disposal of hazardous materials; and regarding labelling and provision of Material Safety Data Sheets (MSDS) acceptable to Health Canada.

.2 Ventilate area of work as directed Departmental Representative by use of approved portable supply and exhaust fans.

1.9 DELIVERY, STORAGE AND HANDLING

.1 Deliver, store and handle materials in accordance with Section 01 61 00 - Common Product Requirements and with manufacturer's written instructions.

.2 Delivery and Acceptance Requirements: deliver materials to site in original factory packaging, labelled with manufacturer's name and address.

.3 Storage and Handling Requirements:

.1 Store materials in dry location and in accordance with manufacturer's recommendations in clean, dry, well-ventilated area.

.2 Replace defective or damaged materials with new.

Part 2 Products

2.1 SEALANT MATERIALS

.1 Do not use caulking that emits strong odours, contains toxic chemicals or is not certified as mould resistant in air handling units.

.2 When low toxicity caulks are not possible, confine usage to areas which off gas to exterior, are contained behind air barriers, or are applied several months before occupancy to maximize off gas time.

.3 Where sealants are qualified with primers use only these primers.

2.2 SEALANT MATERIALS

.1 Type 1: Medium modulus, moisture curing, one-part silicone sealant. Meeting the specified requirements of specification CAN/CGSB-19.13-M87, Classification MCG-2-25-A-L.

.1 Locations: Sheet Metal Roofing

.2 Acceptable Products:

.1 Dow 791 or 795

.2 Spectrem 2 by Tremco Ltd.

.3 Sika Sikasil WS-295

.2 Type 2: One component, paintable acrylic latex sealant. Meeting the specified requirements of specification CGSB-19-GP-17M.

.1 Locations: Interior non-moving joints that may be painted.

.2 Acceptable Products:

.1 Tremflex 834 by Tremco Ltd.

.2 DAP Alex Plus

.3 Type 3: Ultra low modulus, one component, moisture curing silicone sealant.

.1 Location: Perimeter of exterior openings.

.2 Acceptable Product:

.1 Spectrem 1 by Tremco Ltd.

.2 Dow Corning 790

.3 Sika Sikasil WS-290

.4 Colours of sealant to be selected by the Departmental Representative from the range of manufacturer's standard colours.

.5 Joint Cleaner

.1 Non-corrosive and non-staining type, compatible with joint forming materials and sealant in accordance with sealant manufacturer's written recommendations.

.6 Preformed compressible and non-compressible back-up materials:

.1 Polyethylene, urethane, neoprene or vinyl foam:

.1 Extruded closed cell foam backer rod.

.2 Size: oversize 30 to 50 %.

.3 Vertical Surfaces: Extruded Polyolefin foam

.1 Standard of Acceptance: Sof Rod by Tremco.

.4 Horizontal Surfaces: Closed cell polyethylene foam.

.1 Standard of Acceptance: Standard Backer Rod by Tremco.

.2 Bond breaker tape: Polyethylene bond breaker tape which will not bond to sealant.

2.3 WATERTIGHT DECK SEALER FOR OVERHEAD DOOR SILLS

.1 Preformed, Pre-Compressed, Self-Expanding, Sealant System with Silicone Pre-Coated Surface Watertight, Traffic Durable, Primary Seal for Horizontal Joints:

.1 Movement: Capable of +50%, -50% (100% total) of nominal material size.

.2 Width: As indicated.

.3 Depth: as recommended by manufacturer.

.4 Standard of Acceptance: DSM System from Emseal

2.4 JOINT CLEANER

.1 Non-corrosive and non-staining type, compatible with joint forming materials and sealant in accordance with sealant manufacturer's written recommendations.

.2 Primer: in accordance with sealant manufacturer's written recommendations.

Part 3 Execution

3.1 EXAMINATION

.1 Verification of Conditions: verify that conditions of substrate previously installed under other Sections or Contracts are acceptable for joint sealants installation in accordance with manufacturer's written instructions.

3.2 FORMED OPENINGS

.1 Provide properly formed and prepared expansion joint openings constructed to the exact dimensions and elevations shown on manufacturer’s standard system drawings or as shown on the contract drawings.

3.3 SURFACE PREPARATION

.1 Examine joint sizes and conditions to establish correct depth to width relationship for installation of backup materials and sealants. Maintain depth of sealant at middle of joint width as follows:

Joint Width	Sealant Depth	Joint Depth
6 mm	6 mm	10 mm
20 mm	10 mm	15 mm
32 mm	13 mm maximum	20 mm

Minimum adhesion surface to be 1.5 times depth.

.2 Clean bonding joint surfaces of harmful matter substances including dust, rust, oil grease, and other matter which may impair Work.

.3 Do not apply sealants to joint surfaces treated with sealer, curing compound, water repellent, or other coatings unless tests have been performed to ensure compatibility of materials. Remove coatings as required.

.4 Ensure joint surfaces are dry and frost free.

.5 Prepare surfaces in accordance with manufacturer's directions.

3.4 PRIMING

.1 Where necessary to prevent staining, mask adjacent surfaces prior to priming and caulking.

.2 Prime sides of joints in accordance with sealant manufacturer's instructions immediately prior to caulking.

3.5 BACKUP MATERIAL

.1 Apply bond breaker tape where required to manufacturer's instructions.

.2 Install joint filler to achieve correct joint depth and shape, with approximately 30% compression.

3.6 MIXING

.1 Mix materials in strict accordance with sealant manufacturer's instructions.

3.7 APPLICATION

.1 Sealant:

.1 Apply sealant in accordance with manufacturer's written instructions.

.2 Mask edges of joint where irregular surface or sensitive joint border exists to provide neat joint.

.3 Apply sealant in continuous beads.

.4 Apply sealant using gun with proper size nozzle.

.5 Use sufficient pressure to fill voids and joints solid.

.6 Form surface of sealant with full bead, smooth, free from ridges, wrinkles, sags, air pockets, embedded impurities.

.7 Tool exposed surfaces before skinning begins to give slightly concave shape.

.8 Remove excess compound promptly as work progresses and upon completion.

.2 Deck Sealer:

.1 Provide properly formed and prepared expansion joint openings constructed to the exact dimensions and elevations shown on manufacturer’s standard system drawings or as shown on the contract drawings. Deviations from these dimensions will not be allowed without the written consent of the Departmental Representative

.2 Clean the joint opening of all contaminants immediately prior to installation of expansion joint system. Repair spalled, irregular or unsound joint surfaces using accepted industry practices for repair of the substrates in question. Remove protruding roughness to ensure joint sides are smooth. Ensure that there is sufficient depth to receive the full depth of the size of the system being installed. Refer to Manufacturers Installation Guide for detailed step-by-step instructions.

.3 Locations:

.1 Caulk all joints where indicated on the drawings and at all locations where required to provide a complete weathertight building.

.2 Install sealants in all locations shown on drawings.

.3 Install sealant at the perimeter of all exterior openings where doors, windows, grilles and other items abut or penetrate the exterior wall materials.

.4 Install sealant at all door saddles, spread a bead of sealant compound over entire seat of saddles at least 3 mm thick before installing saddle.

.5 Seal the junctions of differing exterior wall materials.

.6 Provide a minimum of two continuous beads of sealant under all prefinished galvanized steel wall flashings.

.4 Curing:

.1 Cure sealants in accordance with sealant manufacturer's instructions.

.2 Do not cover up sealants until proper curing has taken place.

3.8 CLEANING

.1 Progress Cleaning: clean in accordance with Section 01 74 11 - Cleaning.

.1 Leave Work area clean at end of each day.

.2 Clean adjacent surfaces immediately.

.3 Remove excess and droppings, using recommended cleaners as work progresses.

.4 Remove masking tape after initial set of sealant.

.2 Final Cleaning: upon completion remove surplus materials, rubbish, tools and equipment in accordance with Section 01 74 11 - Cleaning.

3.9 PROTECTION

.1 Protect installed products and components from damage during construction.

.2 Repair damage to adjacent materials caused by joint sealants installation.

END OF SECTION

Part 1 General

1.1 SECTION INCLUDES

.1 Metal doors, frames, and glazing

1.2 RELATED REQUIREMENTS

.1 Section 07 62 00 – Sheet Metal Flashing and Trim.

.2 Section 07 92 00 – Joint Sealants.

.3 Section 08 71 00 – Hardware.

1.3 REFERENCES

.1 American Society for Testing and Materials International (ASTM)

.1 ASTM A653/A653M-06a, Specification for Steel Sheet, Zinc-Coated (Galvanized) or Zinc-Iron Alloy-Coated (Galvannealed) by the Hot-Dip Process.

.2 ASTM B29-03, Standard Specification for Refined Lead.

.3 ASTM B749-03, Standard Specification for Lead and Lead Alloy Strip, Sheet and Plate Products.

.2 Canadian General Standards Board (CGSB)

.1 CAN/CGSB-1.181-99, Ready-Mixed Organic Zinc-Rich Coating.

.2 CGSB 41-GP-19Ma-84, Rigid Vinyl Extrusions for Windows and Doors.

.3 Canadian Standards Association (CSA International)

.1 CSA-G40.20-04/G40.21-04, General Requirements for Rolled or Welded Structural Quality Steel/Structural Quality Steel.

.2 CSA W59-03, Welded Steel Construction (Metal Arc Welding).

.4 Canadian Steel Door Manufacturers' Association (CSDMA)

.1 CSDMA, Recommended Specifications for Commercial Steel Doors and Frames, 2000.

.2 CSDMA, Selection and Usage Guide for Commercial Steel Doors, 1990.

.5 National Fire Protection Association (NFPA)

.1 NFPA 80-99, Standard for Fire Doors and Fire Windows.

.2 NFPA 252-03, Standard Methods of Fire Tests of Door Assemblies.

.6 Underwriters' Laboratories of Canada (ULC)

.1 CAN/ULC-S702-97, Standard for Thermal Insulation, Mineral Fibre, for Buildings.

.2 CAN/ULC-S704-03, Standard for Thermal Insulation, Polyurethane and Polyisocyanurate Boards, Faced.

.3 CAN4-S104-M80, Standard Method for Fire Tests of Door Assemblies.

.4 CAN4-S105-M85, Standard Specification for Fire Door Frames Meeting the Performance Required by CAN4-S104.

1.4 SYSTEM DESCRIPTION

.1 Design Requirements:

.1 Design exterior frame assembly to accommodate to expansion and contraction when subjected to minimum and maximum surface temperature of -35 degrees C to 35 degrees C.

.2 Maximum deflection for exterior steel entrance screens under wind load of 1.2 kPa not to exceed 1/175th of span.

1.5 ACTION AND INFORMATIONAL SUBMITTALS

.1 Provide product data: in accordance with Section 01 33 00 - Submittal Procedures.

.2 Provide shop drawings: in accordance with Section 01 33 00 - Submittal Procedures.

.1 Indicate each type of door, material, steel core thicknesses, mortises, reinforcements, location of exposed fasteners, openings, glazed, louvered, arrangement of hardware, fire rating and finishes.

.2 Indicate each type frame material, core thickness, reinforcements, glazing stops, location of anchors and exposed fastenings, reinforcing, fire rating, and finishes.

.3 Include schedule identifying each unit, with door marks and numbers relating to numbering on drawings and door schedule.

1.6 DELIVERY, STORAGE AND HANDLING

.1 Deliver, store and handle materials in accordance with Section 01 11 55 - General Requirements.

Part 2 Products

2.1 MATERIALS

.1 Hot dipped galvanized steel sheet: to ASTM A653M, ZF75, minimum base steel thickness in accordance with CSDMA Table 1 - Thickness for Component Parts.

.1 Reinforcement channel: to CSA G40.20/G40.21, Type 44W, coating designation to ASTM A653M, ZF75.

2.2 DOOR CORE MATERIALS

.1 Stiffened: face sheets laminated insulated core (Exterior Doors).

.1 Polyurethane: to CAN/ULC-S704 rigid, modified polyisocyanurate, closed cell board. Density 32 kg/m^3.

.2 Maximum Installed U-Factor: 0.29.

.3 Standard of Acceptance: **SW Fleming Trio-E**

2.3 ADHESIVES

.1 Polystyrene and polyurethane cores: heat resistant, epoxy resin based, low viscosity, contact cement.

.2 Lock-seam doors: fire resistant, resin reinforced polychloroprene, high viscosity, sealant/adhesive.

2.4 PRIMER

.1 Touch-up prime CAN/CGSB-1.181.

2.5 PAINT

.1 Field paint steel doors and frames in accordance with Section[s] 09 91 00 - Painting, Protect weatherstrips from paint. Provide final finish free of scratches or other blemishes.

2.6 ACCESSORIES

.1 Door silencers: single stud rubber/neoprene type.

.2 Exterior top and bottom caps: rigid polyvinylchloride extrusion conforming to CGSB 41-GP-19Ma.

.3 Fabricate glazing stops as formed channel, minimum 16 mm height, accurately fitted, butted at corners and fastened to frame sections with counter-sunk oval head sheet metal screws.

.4 Door seals: Refer to Section 08 71 00 – Door Hardware.

.5 Metallic paste filler: to manufacturer's standard.

.6 Foam Insulation: spray polyurethane to CAN/ULC-S705.1.

.7 Sill angle: 100 x 100 mm structural fiberglass angle, 6 mm thickness.

.8 Sealant: Refer to Section 07 92 00 – Joint Sealants.

.9 Glazing:

.1 Glass: to CAN/CGSB-12.1.

.2 Insulated glass units: to CAN/CGSB-12.8, double unit, 19mm overall thickness.

.1 Glass thickness: 3mm each light.

.2 Inter-cavity space thickness: 12.7mm with low conductivity spacer.

.3 Standard of acceptance: Quanex Super Spacer

.4 Glass coating, surface number 2: Low “E”, Type 1

.5 Glass coating, surface number 4: Low “E”, Type 2

.6 Inert gas fill: 90% argon

.3 Low emissivity glass (LOW E), 3mm thick

.1 Type 1:

.1 Metallic coating, soft, sputtered.

.2 Light transmittance: 70%

.3 SHGC: 0.37

.4 U-value: 1.42

.5 Standard of acceptance: LoE 270 by Cardinal

.2 Type 2:

.1 Metallic coating: hard, pyrolytic

.2 Light transmittance: 80%

.3 SHGC: 0.69

.4 U-value: 1.92

.5 Standard of acceptance: i89 by Cardinal

.3 IGU Center of Glass Results:

.1 Light transmittance: 69%

.2 SHGC: 0.36

.3 U-value: 1.14

.10 Make provisions for glazing as indicated and provide necessary glazing stops.

2.7 FRAMES FABRICATION GENERAL

.1 Fabricate frames in accordance with CSDMA specifications.

.2 Fabricate frames to profiles and maximum face sizes as indicated.

.3 Exterior frames: 1.6 mm thermally broken type construction.

.4 Blank, reinforce, drill and tap frames for mortised, templated hardware, using templates provided by finish hardware supplier. Reinforce frames for surface mounted hardware.

.5 Protect mortised cutouts with steel guard boxes.

.6 Prepare frame for door silencers, 3 for single door.

.7 Manufacturer's nameplates on frames and screens are not permitted.

.8 Conceal fastenings except where exposed fastenings are indicated.

.9 Provide factory-applied touch up primer at areas where zinc coating has been removed during fabrication.

.10 Insulate exterior frame components with polyurethane insulation.

2.8 FRAME ANCHORAGE

.1 Provide appropriate anchorage to floor and wall construction.

.2 Locate each wall anchor immediately above or below each hinge reinforcement on hinge jamb and directly opposite on strike jamb.

.3 Provide 2 anchors for rebate opening heights up to 1520 mm and 1 additional anchor for each additional 760 mm of height or fraction thereof.

.4 Locate anchors for frames in existing openings not more than 150 mm from top and bottom of each jambs and intermediate at 660 mm on centre maximum.

2.9 FRAMES: WELDED TYPE

.1 Welding in accordance with CSA W59.

.2 Accurately mitre or mechanically joint frame product and securely weld on inside of profile.

.3 Cope accurately and securely weld butt joints of mullions, transom bars, centre rails and sills.

.4 Grind welded joints and corners to a flat plane, fill with metallic paste and sand to uniform smooth finish.

.5 Securely attach floor anchors to inside of each jamb profile.

.6 Weld in 2 temporary jamb spreaders per frame to maintain proper alignment during shipment.

.7 Securely attach lead to inside of frame profile from return to jamb soffit (inclusive) on door side of frame only.

2.10 DOOR FABRICATION GENERAL

.1 Doors: swing type, flush, with provision for glass and/or louvre openings as indicated.

.2 Exterior doors: insulated hollow stiffened steel construction.

.3 Fabricate doors with longitudinal edges locked seam. Seams: visible.

.4 Blank, reinforce, drill doors and tap for mortised, templated hardware.

.5 Factory prepare holes 12.7 mm diameter and larger except mounting and through-bolt holes, on site, at time of hardware installation.

.6 Reinforce doors where required, for surface mounted hardware. Provide flush PVC top caps to exterior doors. Provide inverted, recessed, spot welded channels to top and bottom of interior doors.

.7 Provide factory-applied touch-up primer at areas where zinc coating has been removed during fabrication.

.8 Manufacturer's nameplates on doors are not permitted.

2.11 HOLLOW STEEL CONSTRUCTION

.1 Form face sheets for exterior doors from 1.6 mm sheet steel.

.2 Reinforce doors with vertical stiffeners, securely laminated to face sheets at 150 mm on centre maximum.

.3 Fill voids between stiffeners of exterior doors with polyurethane core.

2.12 THERMALLY BROKEN DOORS AND FRAMES

.1 Fabricate thermally broken doors by using insulated core and separating exterior parts from interior parts with continuous interlocking thermal break.

.2 Thermal break: rigid polyvinylchloride extrusion conforming to CGSB 41-GP-19Ma.

.3 Fabricate thermally broken frames separating exterior parts form interior parts with continuous interlocking thermal break.

.4 Apply insulation.

Part 3 Execution

3.1 MANUFACTURER'S INSTRUCTIONS

.1 Compliance: comply with manufacturer's written recommendations or specifications, including product technical bulletins, handling, storage and installation instructions, and datasheets.

3.2 INSTALLATION GENERAL

.1 Install labelled steel fire rated doors and frames to NFPA 80 except where specified otherwise.

.2 Install doors and frames to CSDMA Installation Guide.

3.3 FRAME INSTALLATION

.1 Set frames plumb, square, level and at correct elevation.

.2 Secure anchorages and connections to adjacent construction.

.3 Brace frames rigidly in position while building-in. Install temporary horizontal wood spreader at third points of door opening to maintain frame width. Provide vertical support at centre of head for openings over 1200 mm wide. Remove temporary spreaders after frames are built-in.

.4 Make allowances for deflection of structure to ensure structural loads are not transmitted to frames.

.5 Caulk perimeter of frames between frame and adjacent material.

.6 Maintain continuity of air barrier and vapour retarder.

3.4 DOOR INSTALLATION

.1 Install doors and hardware in accordance with hardware templates and manufacturer's instructions and Section 08 71 00 - Door Hardware.

.2 Provide even margins between doors and jambs and doors and finished floor and thresholds as follows.

.1 Hinge side: 1.0 mm.

.2 Latchside and head: 1.5 mm.

.3 Finished floor, and thresholds: 13 mm.

.3 Adjust operable parts for correct function.

3.5 FINISH REPAIRS

.1 Touch up with primer finishes damaged during installation.

.2 Fill exposed frame anchors surfaces with imperfections with metallic paste filler and sand to a uniform smooth finish.

3.6 GLAZING

.1 Glaze windows in accordance with AAMA/WDMA/CSA 101/I.S.2/A440.

END OF SECTION

Part 1 General

1.1 SECTION INCLUDES

.1 Insulated Steel Sectional Overhead Doors.

.2 Hardware.

.3 Electric Operators and Controls.

1.2 RELATED REQUIREMENTS

.1 Section 07 90 00 – Joint Sealants

.2 Section 08 06 10 – Door Schedule.

.3 Section 08 71 00 – Door Hardware.

.4 Division 26 - Electrical

1.3 REFERENCES

.1 ANSI

.1 ANSI/DASMA 102 - American National Standard Specifications for Sectional Overhead Type Doors.

.2 ASTM International

ASTM A123/A123M-09, Standard Specification for Zinc (Hot-Dip Galvanized) Coatings on Iron and Steel Products.

.1 ASTM A1008/A1008M-11, Standard Specification for Steel, Sheet, Cold-Rolled, Carbon, Structural, High-Strength Low-Alloy High-Strength Low-Alloy with Improved Formability, Solution Hardened, and Bake Hardenable.

.2 ASTM D523-0, Standard Test Method for Specular Gloss.

.3 ASTM D822-01(2006), Standard Practice for Filtered Open-Flame Carbon-Arc Exposures of Paint and Related Coatings.

.3 BSI Group

.1 EN 13241 Annex B - Procedure for the determination of values for thermal resistance

.2 EN 12428, Industrial, commercial and garage doors and gates - Thermal transmittance - Requirements for the calculation.

.4 Green Seal Environmental Standards (GS)

.1 GS-11-11, Paints and Coatings.

.5 The Master Painters Institute (MPI)

.1 Architectural Painting Specification Manual - current edition.

.1 MPI #18 Primer, Zinc Rich Organic.

.2 MPI #80 Primer, Vinyl Wash.

.6 South Coast Air Quality Management District (SCAQMD), California State, Regulation XI. Source Specific Standards.

.1 SCAQMD Rule 1113-A2011, Architectural Coatings.

1.4 ACTION AND INFORMATIONAL SUBMITTALS

.1 Submit in accordance with Section 01 33 00 - Submittal Procedures.

.2 Product Data:

.1 Submit manufacturer's instructions, printed product literature and data sheets for doors, hardware, and accessories and include product characteristics, performance criteria, physical size, finish and limitations.

.3 Shop Drawings:

.1 Indicate materials, operating mechanisms, required clearances and electrical connections.

.4 Certificates:

.1 Submit product certificates signed by manufacturer certifying materials comply with specified performance characteristics and criteria and physical requirements.

.5 Test Reports:

.1 Submit certified test reports showing compliance with specified performance characteristics and physical properties.

.6 Sustainable Design Submittals:

.1 Low-Emitting Materials:

.1 Submit listing of adhesives and sealants, and paints and coatings used in building, showing compliance with VOC and chemical component limits or restriction requirements.

1.5 CLOSEOUT SUBMITTALS

.1 Submit in accordance with Section 01 78 00 - Closeout Submittals.

.2 Operation and Maintenance Data: submit operation and maintenance data for overhead door hardware for incorporation into manual.

1.6 QUALITY ASSURANCE

.1 Manufacturer Qualifications: Company specializing in manufacturing products specified in this section with minimum five years documented experience.

.2 Installer Qualifications: Authorized representative of the manufacturer with minimum five years documented experience.

.3 Products Requiring Electrical Connection: Listed and classified by Underwriters Laboratories, Inc./ULC/CSA acceptable to authority having jurisdiction as suitable for purpose specified.

1.7 DELIVERY, STORAGE AND HANDLING

.1 Deliver, store and handle materials in accordance with manufacturer's written instructions.

.2 Delivery and Acceptance Requirements: deliver materials to site in original factory packaging, labelled with manufacturer's name and address.

.3 Storage and Handling Requirements:

.1 Store materials in accordance with manufacturer's recommendations in clean, dry, well-ventilated area.

.2 Store and protect sectional overhead metal doors, hardware and accessories from nicks, scratches, and blemishes.

.3 Replace defective or damaged materials with new.

.4 Waste Management: separate waste materials for reuse and recycling in accordance with Section 01 74 20 - Construction Waste Management.

.1 Remove recycling containers and bins from site and dispose of materials at appropriate facility.

.2 Source separate materials to be reused/recycled into specified sort areas.

Part 2 Products

2.1 DESIGN CRITERIA

.1 Design exterior door assembly to withstand wind load of 1 kPa minimum with horizontal deflection of 1/240 maximum of opening width.

.2 Wiring Connections: Requirements for electrical characteristics.

.1 Contactor to use existing electrical connections.

.3 Single-Source Responsibility: Provide doors, tracks, motors, and accessories from one manufacturer for each type of door. Provide secondary components from source acceptable to manufacturer of primary components

2.2 INSULATED STEEL SECTIONAL OVERHEAD DOORS

.1 Door Assembly: Metal/foam/metal sandwich panel construction. Doors comply with:

.1 ANSI/DASMA 102 - American National Standard Specifications for Sectional Overhead Type Doors.

.2 Size: See Drawings. Door is to be 25 mm higher than finished door opening and extend 25 mm beyond jamb on either side of finished door opening width.

.3 Section joints: 6.3 mm tongue and groove joint.

.4 Section Thickness: 76.2 mm.

.5 Exterior Surface: Multi-Rib pattern with a non-repeating random stucco surface texture.

.6 Exterior Steel: Pre-painted 0.41 mm, hot-dipped galvanized.

.7 Interior Surface: Rib pattern with a non-repeating random stucco surface texture.

.8 Interior Steel: Pre-painted 0.41 mm, hot-dipped galvanized.

.9 End Stiles: End Caps: 16 gauge (1.6 mm) hot dipped galvanized steel. Provide full height thermal break with anti-friction strip

.10 High-Usage Package: Provide with optional high-usage package.

.11 Insulation: Foamed in place CFC-free and HCFC-free polyurethane, fully encapsulated.

.12 Thermal Value: R=25.57 ft^2h F/Btu, (U=0.022 W/m2K).

.13 Exterior Colors:

.1 Custom Colour as selected by Departmental Representative.

.14 Interior Colors:

.1 Manufacturer's standard White.

.15 Wind load Design: ANSI/DASMA 102 standards to meet applicable code.

.16 Hardware: Zinc coated steel hinges and fixtures. Ball bearing rollers with hardened steel races.

.17 Seals:

.1 Standard continuous, replaceable dual seals between sections.

.2 Standard bottom seal: 3-inch (76 mm) vinyl retained in aluminum extrusion.

.3 Top seal: PVC/Vinyl type.

.4 Jamb seal: Dual fin vinyl/steel.

.18 Track: Provide track as recommended by manufacturer to suit loading required and clearances available.

.19 Operation:

.1 Electric.

.20 Standard of Acceptance: Richards-Wilcox Canada Model Thermatite T300-MR.

2.3 HARDWARE

.1 Counter-balance System:

.1 Spring assembly: Oil tempered torsion springs:

.1 Minimum 25,000 cycles.

.2 Spring: Sized to suit the cycles.

.3 Shaft:

.1 25 mm solid CRS shaft with full length keyway, recommended for doors up to 1000 lbs (450 kg).

.4 Wire Rope: Aircraft type 7x19 construction with a safety factor of 5:1 minimum.

.2 Hardware: Include all the required hardware and zinc plated fasteners.

.1 Hinges: Linear style 11-gauge (3 mm) zinc coated steel.

.2 Track 75 mm: Rolled formed from 75 mm, 12 gauge (2.7 mm) galvanized steel.

.1 Mount:

.1 ADCA Mount: Continuous adjustable track angle ADCA. Bolted type, field adjustable to ensure weather tight seal, fabricated from 13 gauge (2.4 mm) commercially galvanized steel, designed to provide continuous track support for full opening height.

.2 Track Hangers: Perforated type 1-1/4 inches by 1-1/4 inches (32 mm by 32 mm) angles, roll formed from 14 gauge (2.0 mm) thick commercially galvanized steel.

.3 Horizontal Track Curve: 406 mm radius.

.4 Rollers:

.1 Hardened steel outer race, 2-7/8 inch (73 mm) diameter, with ten 5/16 inch (8 mm) ball bearings, and 7/16 inch (11 mm) diameter roller axels.

.5 Roller Brackets: Fabricated from commercially galvanized steel. Graduated type design to suit the slope in the vertical track to ensure weather tight seal. Thickness as follows:

.1 11 gauge (3.1 mm).

.3 Horizontal angle: Full length.

.4 Pusher springs: For all standard lift doors with manual chain hoist or jackshaft electric operators.

.5 Bumper leaf springs: For high lift and vertical lift door applications.

.6 Follow the roof pitch: Install the track to follow roof pitch for standard lift and high lift doors.

.7 Track guards: On both sides of door.

.8 Electro-mechanical reversing safety bar: Full width of bottom section.

2.4 ELECTRICAL OPERATOR AND CONTROLS

.1 Electrical motors, controller units, remote push-button stations, relays and other electrical components: to CSA approval.

.1 Entrapment Protection:

.1 Photoelectric sensors.

.2 Operator Controls:

.1 Push-button operated control stations with open, close, and stop buttons.

.2 Surface mounting.

.3 Interior location.

.2 Provide jack shaft operators with floor level disconnect device to allow for manual operation in event of power failure.

.1 Equip Operator with:

.1 Electrical interlock switch to disconnect power to operator when in manual operation.

.2 Built-in chain hoist for manual operation in event of power failure.

.3 Door speed: 300 mm per second.

2.5 FABRICATION

.1 Fabricate the doors to dimensions detailed on reviewed shop drawings, free from distortion and defects detrimental to the appearance and performance.

.2 Ensure that site dimensions are taken and confirmed prior to the fabrication of the doors, frames and other components.

.3 Accurately fit joints and intersecting members with adequate fastenings.

Part 3 Execution

3.1 EXAMINATION

.1 Verification of Conditions: verify conditions of substrates previously installed under other Sections or Contracts are acceptable for multi-leaf vertical lift metal doors installation in accordance with manufacturer's written instructions.

3.2 INSTALLATION

.1 Manufacturer's Instructions: comply with manufacturer's written recommendations, including product technical bulletins, product catalogue installation instructions, product carton installation instructions, and data sheets.

.2 Install doors and hardware in accordance with manufacturer's instructions.

.3 Touch-up doors with primer where galvanized finish damaged during fabrication.

.4 Install electrical motors, controller units, pushbutton stations, relays and other electrical equipment required for door operation.

.5 Installation includes electric wiring from power supply located near door opening.

.6 Lubricate springs and adjust door operating components to ensure smooth opening and closing of doors.

.7 Adjust operable parts for correct function.

.8 Adjust weatherstripping to form weathertight and airtight seal on all sides of door.

.9 Adjust doors for smooth operation.

3.3 CLEANING

.1 Progress Cleaning: clean in accordance with Section 01 11 55 – General Requirements.

.1 Leave Work area clean at end of each day.

.2 Final Cleaning: upon completion remove surplus materials, rubbish, tools and equipment in accordance with Section 01 11 55 – General Requirements.

.1 Remove traces of primer; clean doors and frames.

.2 Clean glass and glazing materials with approved non-abrasive cleaner.

3.4 PROTECTION

.1 Protect installed products and components from damage during construction.

.2 Repair damage to adjacent materials caused by multi-leaf vertical lift metal door installation.

END OF SECTION

Part 1 General

1.1 SECTION INCLUDES

.1 Vinyl windows and glazing

1.2 RELATED REQUIREMENTS

.1 Section 07 62 00 – Sheet Metal Flashing and Trim

.2 Section 07 92 00 – Joint Sealants.

1.3 REFERENCE STANDARDS

.1 ASTM International (ASTM)

.1 ASTM A 123/A 123M-15, Standard Specification for Zinc (Hot-Dip galvanized) Coatings on Iron and Steel Products.

.2 ASTM E 1748-95(2009), Standard Test Method for Evaluating the Engagement Between Windows and Insect Screens as an Integral System.

.2 CSA Group (CSA)

.1 AAMA/WDMA/CSA 101/I.S.2/A440-11(R2016), NAFS - North American Fenestration Standard for Windows, Doors, and Skylights.

.2 CSA A440S1-09, Canadian Supplement to AAMA/WDMA/CSA 101/1.S.2/A440, NAFS - North American Fenestration Standard for Windows, Doors, and Skylights.

.3 CAN/CSA-A440.2-14 /A440.3-14, Fenestration energy performance/User guide to CSA A440.2, Fenestration energy performance.

.4 CAN/CSA-A440.4-07(R2016), Window, Door, and Skylight Installation

.5 CAN/CSA-Z91-02(R2013), Health and Safety Code for Suspended Equipment Operations.

.3 Master Painters Institute (MPI)

.1 Architectural Painting Specification Manual - current edition.

.1 MPI #79, Primer, Alkyd, Anti-Corrosive for Metal.

.4 Screen Manufacturers Association (SMA)

.1 SMA 1201R-2012 Specification for Insect Screens for Windows, Sliding Doors and Swinging Doors.

1.4 ADMINISTRATIVE REQUIREMENTS

.1 Pre-Installation Meetings:

.1 Convene pre-installation meeting 1 week prior to beginning work of this Section, with Departmental Representative in accordance with Section 01 11 55 – General Requirements to:

.1 Verify project requirements.

.2 Review installation and substrate conditions.

.3 Co-ordination with other construction subtrades.

.4 Review manufacturer's written installation instructions and warranty requirements.

1.5 ACTION AND INFORMATIONAL SUBMITTALS

.1 Submit in accordance with Section 01 33 00- Submittal Procedure.

.2 Product Data:

.1 Submit manufacturer's instructions, printed product literature and data sheets for windows and include product characteristics, performance criteria, physical size, finish and limitations.

.2 Submit 2 copies of WHMIS MSDS in accordance with 01 35 30 - Health and Safety Requirements.

.3 Shop Drawings:

.1 Indicate materials and details in full size scale for head, jamb and sill, profiles of components, junction between combination units, interior and exterior trim, elevations of unit, anchorage details, location of isolation coating, description of related components, fasteners, and caulking. Indicate location of manufacturer's nameplates.

.2 Indicate locations, dimensions, openings and requirements of related work.

.4 Test and Evaluation Reports:

.1 Submit test reports from approved independent testing laboratories, certifying compliance with specifications.

.2 All test reports that reference the NAFS must include, on the first page, a summary of the results including, at minimum:

.1 The product manufacturer.

.2 The type of product.

.3 The model number/series number.

.4 The primary product designation.

.5 The secondary product designation.

.1 Positive design pressure.

.2 Negative design pressure.

.3 Water penetration resistance test pressure.

.4 Canadian air infiltration and exfiltration levels.

.6 The test completion date.

.3 The report will also contain the following information:

.1 Test dates.

.2 Report preparation dates.

.3 Test information retention period.

.4 Location of testing facilities.

.5 Full description of test samples, including:

.1 Condensation resistance.

.2 Safety drop - vertical sliding windows only.

.3 Block operation - sliding windows only.

.4 Sash strength and stiffness - projecting.

.5 Sash pull-off - vinyl windows.

.6 Forced entry resistance.

.7 Mullion deflection - combination and composite windows.

.6 Complete description of amendments, as applicable.

.7 Conclusion.

.8 Drawings signed by the testing laboratory, if provided.

1.6 CLOSEOUT SUBMITTALS

.1 Submit in accordance with Section 01 78 00- Closeout Submittals.

.2 Operation and Maintenance Data: submit operation and maintenance data for windows for incorporation into manual.

.3 Warranty Documentation: submit warranty documents specified.

1.7 QUALITY ASSURANCE

.1 Certifications: product certificates signed by manufacturer certifying materials comply with specified performance characteristics and criteria and physical requirements.

.2 Mock-Up:

.1 Provide site mock-up for work of this Section indicating methods and materials, and procedures proposed to achieve final results in accordance with Section 01 11 55 – General Instructions, and to comply with following requirements, using materials indicated for completed work:

.1 Build mock-ups in location and of size as directed by Departmental Representative.

.2 Obtain Departmental Representative's acceptance of mock-ups before starting construction; mock-up used throughout construction period as standard of acceptance for subsequent work.

.3 Mock-up may form part of permanent structure when accepted by Departmental Representative; repair or replace unacceptable mock-ups at no additional cost to Owner.

1.8 DELIVERY, STORAGE AND HANDLING

.1 Deliver, store and handle materials in accordance with Section with manufacturer's written instructions.

.2 Delivery and Acceptance Requirements: deliver materials to site in original factory packaging, labelled with manufacturer's name and address.

1.9 WARRANTY

.1 Manufacturer's warranty: Submit, for Departmental Representative acceptance, manufacturer's standard warranty document executed by authorized company official. Manufacturer's warranty in addition to and not limit other rights Owner may have under Contract Documents.

Part 2 Products

2.1 MATERIALS

.1 Materials: to AAMA/WDMA/CSA 101/I.S.2/A440 supplemented as follows:

.2 Windows by same manufacturer.

.3 Sash: vinyl.

.4 Main frame: vinyl.

.5 Painted frame:

.1 Exterior of all vinyl frames to be factory painted.

.2 Colour to be selected by Departmental Representative from full range of manufacturer standard colours.

.6 Glass: to CAN/CGSB-12.1.

.7 Insulated glass units: to CAN/CGSB-12.8, triple unit, 35mm overall thickness.

.1 Glass thickness: 3mm each light.

.2 Inter-cavity space thickness: 12.7mm with low conductivity spacer.

.1 Standard of acceptance: Quanex Super Spacer

.3 Glass coating, surface number 2: Low “E”, Type 1

.4 Glass coating, surface number 5: Low “E”, Type 2

.5 Inert gas fill: 90% argon

.8 Low emissivity glass (LOW E), 3mm thick

.1 Type 1:

.1 Metallic coating, soft, sputtered.

.2 Light transmittance: 70%

.3 SHGC: 0.37

.4 U-value: 1.42

.5 Standard of acceptance: LoE 270 by Cardinal

.2 Type 2:

.1 Metallic coating, soft, sputtered.

.2 Light transmittance: 79%

.3 Shading co-efficient: 0.68

.4 SHGC: 1.48

.5 Standard of acceptance: LoE 180 by Cardinal

.1 IGU Center of Glass Results:

.1 Light transmittance: 54%

.2 SHGC: 0.31

.3 U-value: 0.705

.9 Screens: to ASTM E1748 on entire area of ventilating portion of windows.

.1 Insect screening mesh: count 18 x 16.

.2 Screen frames: aluminum colour to match window frames.

.3 Mount screen frames for interior replacement.

.10 Metal Sills & Flashing: Refer to Section 07 60 00 – Flashing and Sheet Metal.

.11 Window Returns & Trim: Refer to Section 06 10 53 – Miscellaneous Rough Carpentry.

.12 Isolation coating: alkali resistant bituminous paint.

.13 Sealants: Ultra low modulus, one component, moisture curing silicone sealant.

.14 Foam Insulation: spray polyurethane to CAN/ULC-S705.1.

.15 Window frame air/vapour barrier: Refer to Section 07 25 00 – Weather Barriers.

2.2 WINDOW TYPE AND CLASSIFICATION

.1 Product type[s]:

.1 FW- Fixed window.

.2 Classification rating: to AAMA/WDMA/CSA 101/I.S.2/A440.

.1 Primary designation:

.1 Performance classes: LC.

.2 Performance categories: 25.

.2 Secondary designation:

.1 Design pressure: 1200 Pa

.2 Water penetration resistance test pressure: 180 Pa

.3 Canadian air infiltration and exfiltration levels: FIXED or A3.

.3 Surface condensation control: compliant with standard CAN/CSA-A440.2/A440.3.

.4 Forced Entry: F2.

2.3 FABRICATION

.1 Fabricate in accordance with AAMA/WDMA/CSA 101/I.S.2/A440 supplemented as follows:

.2 Fabricate units square and true with maximum tolerance of plus or minus 1.5 mm for units with a diagonal measurement of 1800 mm or less, and plus or minus 3 mm for units with a diagonal measurement over 1800 mm.

.3 Face dimensions detailed maximum permissible sizes.

.4 Brace frames to maintain squareness and rigidity during shipment and installation.

.5 Finish steel clips and reinforcement with 380 shop coat primer to MPI #79.

2.4 ISOLATION COATING

.1 Coatings: in accordance with manufacturer's recommendations for surface conditions.

.2 Isolate aluminum from following components, by means of isolation coating:

.1 Dissimilar metals except stainless steel, zinc, or white bronze of small area.

.2 Concrete, mortar and masonry.

.3 Wood.

2.5 GLAZING

.1 Glaze windows in accordance with AAMA/WDMA/CSA 101/I.S.2/A440.

2.6 HARDWARE

.1 Hardware: stainless steel or white bronze sash locks and aluminum handles to provide security and permit easy operation of units.

.2 Locks: provide operating sash with spring loading locking device, to provide automatic locking in closed position.

.3 Include special keyed opening device for windows normally locked.

2.7 AIR BARRIER AND VAPOUR RETARDER

.1 Equip window frames with site installed air barrier material for sealing to building air barrier and vapour retarder as follows:

.1 Material compatible with, building air barrier and vapour retarder materials to provide required air tightness and vapour diffusion control throughout exterior envelope assembly.

.2 Material width: adequate to provide required air tightness and vapour diffusion control to building air barrier and vapour retarder from interior.

Part 3 Execution

3.1 EXAMINATION

.1 Verification of Conditions: verify conditions of substrates previously installed under other Sections or Contracts acceptable for product installation in accordance with manufacturer's written instructions.

3.2 INSTALLATION

.1 Window installation:

.1 Install in accordance with AAMA/WDMA/CSA 101/I.S.2/A440.

.2 Arrange components to prevent abrupt variation in colour.

.2 Sill installation:

.1 Install metal sills with uniform wash to exterior, level in length, straight in alignment with plumb upstands and faces. Use one-piece lengths at each location.

.2 Cut sills to fit window opening.

.3 Secure sills in place with anchoring devices located at and evenly spaced 600 mm on centre in between.

.4 Fasten expansion joint cover plates and drip deflectors with self tapping stainless steel screws.

.5 Maintain 6 to 9 mm space between butt ends of continuous sills. For sills over 1200 mm in length, maintain 3 to 6 mm space at each end.

.3 Caulking:

.1 Seal joints between windows and window sills with sealant. Bed sill expansion joint cover plates and drip deflectors in bedding compound. Caulk between sill upstand and window-frame. Caulk butt joints in continuous sills.

.2 Apply sealant in accordance manufacturers recommendations. Conceal sealant within window units except where exposed use is permitted by Departmental Representative.

3.3 ADJUSTING

.1 Adjust operating hardware for correct operation in accordance with manufacturer's installation instructions.

3.4 CLEANING

.1 Progress Cleaning: clean in accordance with Section 01 11 55 – General Requirements

.1 Leave Work area clean at end of each day.

.2 Final Cleaning: upon completion remove surplus materials, rubbish, tools and equipment in accordance with Section 01 11 55 – General Requirements.

3.5 PROTECTION

.1 Protect installed products and components from damage during construction.

.2 Repair damage to adjacent materials caused by window installation.

END OF SECTION

Part 1 General

1.1 RELATED REQUIREMENTS

.1 Section 08 11 00 – Metal Doors and Frames.

.2 Section 08 36 13 – Sectional Overhead Doors.

.3 Section 10 22 13 – Wire Mesh Partitions.

1.2 REFERENCES

.1 American National Standards Institute (ANSI) / Builders Hardware Manufacturers Association (BHMA)

.1 ANSI/BHMA A156.1-2000, American National Standard for Butts and Hinges.

.2 ANSI/BHMA A156.4-2000, Door Controls - Closers.

.3 ANSI/BHMA A156.5-2001, Auxiliary Locks and Associated Products.

.4 ANSI/BHMA A156.6-2005, Architectural Door Trim.

.5 ANSI/BHMA A156.8-2005, Door Controls - Overhead Stops and Holders.

.6 ANSI/BHMA A156.12-2005, Interconnected Locks and Latches.

.7 ANSI/BHMA A156.13-2002, Mortise Locks and Latches Series 1000.

.8 ANSI/BHMA A156.16-2002, Auxiliary Hardware.

.9 ANSI/BHMA A156.18-2006, Materials and Finishes.

.2 Canadian Steel Door and Frame Manufacturers' Association (CSDMA)

.1 CSDMA Recommended Dimensional Standards for Commercial Steel Doors and Frames - 2009.

1.3 ACTION AND INFORMATIONAL SUBMITTALS

.1 Submit in accordance with Section 01 33 00 - Submittal Procedures.

.2 Submit electronic copy of the Hardware Schedule to the Departmental Representative for review.

.3 Product Data:

.1 Submit manufacturer's instructions, printed product literature and data sheets for door hardware and include product characteristics, performance criteria, physical size, finish and limitations.

.4 Hardware List:

.1 Submit contract hardware list.

.2 Indicate specified hardware, including make, model, material, function, size, finish and other pertinent information.

.5 Test Reports: certified test reports showing compliance with specified performance characteristics and physical properties.

.6 Manufacturer's Instructions: submit manufacturer's installation instructions.

1.4 CLOSEOUT SUBMITTALS

.1 Submit in accordance with Section 01 78 00 - Closeout Submittals.

.2 Operation and Maintenance Data: submit operation and maintenance data for door hardware for incorporation into manual.

.3 Submit manufacturer's parts lists and instructions for closers, locksets, exit devices and electronics upon completion of work.

1.5 MAINTENANCE MATERIALS SUBMITTALS

.1 Extra Stock Materials:

.1 Supply maintenance materials in accordance with Section 01 78 00 - Closeout Submittals.

.2 Tools:

.1 Supply two (2) sets of wrenches for door closers, locksets and fire exit hardware.

1.6 QUALITY ASSURANCE

.1 Regulatory Requirements:

.1 Hardware for doors in fire separations and exit doors certified by a Canadian Certification Organization accredited by Standards Council of Canada.

.2 Certificates: product certificates signed by manufacturer certifying materials comply with specified performance characteristics and criteria and physical requirements.

.3 Make a detailed review of the Schedule of Finish Hardware and make whatever allowance in tender price appropriate to accommodate changes which may be necessary.

.4 Supplier must be an established contract builders' hardware firm. Persons responsible for the complete finish hardware contract for this project, including: scheduling, detailing, ordering and coordinating hardware, shall be experienced Architectural Hardware Departmental Representatives (AHC) and members in good standing with the Door and Hardware Institute (DHI). This representative shall provide the architect with a written report confirming that all hardware items, including electronics, are installed in accordance with the manufacturers' installation instructions and are adjusted and operating properly.

.5 All finish hardware to conform to CAN/CGSB 69-GP Series-M90/ANSI/BHMA-A156 Series.

1.7 DELIVERY, STORAGE AND HANDLING

.1 Deliver, store and handle materials in accordance with Section 01 11 55 – General Requirements and with manufacturer's written instructions.

.2 Delivery and Acceptance Requirements: deliver materials to site in original factory packaging, labelled with manufacturer's name and address.

.3 Package finishing hardware separately for each opening. Identification shall correspond with hardware list symbols. Label all packages legibly, indicating manufacturer's number, type, size and hardware list reference number. Wrap hardware and include screws, bolts and fastenings necessary for proper installation in the package.

.4 Deliver all items of hardware to the job site in manufacturer's original packages. Clearly mark each item with the proper opening number.

.5 Storage and Handling Requirements:

.1 Store materials off ground, indoors and in dry location in accordance with manufacturer's recommendations in clean, dry, well-ventilated area.

.2 Store and protect door hardware from nicks, scratches, and blemishes.

.3 Protect prefinished surfaces with wrapping.

.4 Replace defective or damaged materials with new.

.6 Waste Management: separate waste materials for reuse and recycling in accordance with Section 01 74 20 - Construction Waste Management.

.1 Remove recycling containers and bins from site and dispose of materials at appropriate facility.

.2 Source separate materials to be reused/recycled into specified sort areas.

1.8 PRE-APPROVED ALTERNATES

.1 Bid only those products specified; or for the purpose of tendering, products listed as equivalents or other pre-approved alternative.

.2 Substituted non-approved items will be replaced with specified items and all related costs will be borne by the supplier. This project will be inspected upon completion to ensure compliance.

.3 Submit requests for approval of alternative material or product in writing to the Departmental Representative no later than ten (10) days prior to bid closing. Submissions shall be made in duplicate. Provide samples of the products and finishes proposed if and when requested by the Departmental Representative.

1.9 WARRANTY

.1 All finish hardware shall be guaranteed by the hardware manufacturer, with written certification, for a period of one (1) year from the date of "substantial completion" against any defects in the design, materials and workmanship, except closers and exit devices. Closers shall have a five (5) year guarantee and exit devices shall have a three

(3) year guarantee. Any defects will be made good by the manufacturer at no additional cost to the owner.

Part 2 Products

2.1 DESIGN PRINCIPALS AND STANDARDS

.1 Hardware for fire doors shall meet Underwriters requirements. Submit written certification of conformance to ULC requirements for each type of hardware prior to delivery.

.2 All doors shall be accessible to residents in wheelchairs, including public and common areas.

.3 All doors to be handicap accessible and shall have lever handles consistent with the specified grade of locks for that application.

2.2 MATERIALS

.1 Use one manufacturer's products only for similar items.

.2 Hardware shall be best grade, entirely free from imperfections in manufacture and finish and shall be supplied in accordance with the hardware list specified herein.

.3 The following list of manufacturers and products are considered approved for this project and no variations from the listed or pre-approved items will be permitted.

.4 Installed items to be equal in all respects to approved samples.

.5 Supply all templates as required. Frame manufacturer will allow for maximum swing of doors when templating for closers. On pairs of doors RHR leaf is to be active unless otherwise noted.

.6 Package hardware with all necessary screws and fittings, clearly labelled with door number as per Door Schedule, as to intended location. Include all necessary installation instructions.

.7 Any doors not listed shall have hardware as listed for similar locations.

2.3 APPROVED MANUFACTURERS

.1 Hinges: McKinney.

.1 Note: All hinges to be 3 knuckle with 2 concealed bearings, material and finish as specified.

.2 Locksets, Latchsets and Privacy sets: Sargent 8200 Series.

.3 Closers: Sargent 351 Series; Sargent 1431 Series.

.1 All closers must be ULC listed and certified under ANSI standards A156.4 Grade 1. Use one manufacturer for all closer units throughout the work.

.4 Electric Strikes: HES.

.5 Door Stops & Pulls: Gallery.

.6 Kick Plates: Gallery.

.7 Thresholds, Seals and Door Bottoms: Pemko.

.1 ULC fire/sound/smoke labels where required.

.2 Thresholds for all doors shall allow for passage of a wheelchair.

.8 Overhead Stops: Rixson.

.9 Padlocks: Sargent

2.4 **FASTENINGS**

.1 Use only fasteners provided by manufacturer. Failure to comply may void warranties and applicable licensed labels.

.2 Supply screws, bolts, expansion shields and other fastening devices required for satisfactory installation and operation of hardware.

.3 Exposed fastening devices to match finish of hardware.

.4 Where pull is scheduled on one side of door and push plate on other side, supply fastening devices, and install so pull can be secured through door from reverse side. Install push plate to cover fasteners.

.5 Use fasteners compatible with material through which they pass.

2.5 KEYING

.1 Project to be master keyed to existing system.

.2 Provide each cylinder with two keys, not stamped "Do Not Duplicate".

.3 Provide 6 each master keys.

.4 Supply construction cores and provide 6 each construction keys

.5 Deliver master keys directly to owner

.6 Keying schedule to be submitted by hardware supplier for owner's approval.

.7 Hand over permanent cores and keys to Owner.

2.6 FINISH

.1 All hardware finishes shall match throughout the project, generally satin chrome, stainless steel or as noted in the finish hardware schedule.

Part 3 Execution

3.1 COOPERATION

.1 Confer with the various sections of work and refer to the detail drawings before ordering hardware to be sure that it will conform to and fit actual conditions on the job.

.2 Before furnishing hardware, check drawings for hardware requirements, verify door swings, check shop drawings, frame and door lists, and advise in writing if revisions are required. Ensure early delivery of hardware required for this project.

.3 Supply complete information and templates required by the metal door and fame manufacturers to provide reinforcing for the application of hardware.

.4 Submit the names of hardware manufacturers used in the preparation of the Tender. If the manufacturer's names are not stated, it shall be understood to mean that the hardware will be purchased from the manufacturers specified.

.5 Submit cuts, illustrations or samples of the following items proposed for this project immediately following award of Contract and before ordering hardware:

.1 Hinges

.2 Locksets

.3 Latchsets & Strikes

.4 Exit Devices

.5 Closers

.6 Specialty Items

3.2 INSTALLATION

.1 Manufacturer's Instructions: comply with manufacturer's written recommendations, including product technical bulletins, product catalogue installation instructions, product carton installation instructions, and data sheets.

.2 Supply metal door and frame manufacturers with complete instructions and templates for preparation of their work to receive hardware.

.3 Supply manufacturers' instructions for proper installation of each hardware component.

.4 Install hardware to standard hardware location dimensions in accordance with CSDFMA Canadian Metric Guide for Steel Doors and Frames (Modular Construction).

.5 Where door stop contacts door pulls, mount stop to strike bottom of pull.

.6 Install key control cabinet.

.7 Use only manufacturer's supplied fasteners.

.1 Use of "quick" type fasteners, unless specifically supplied by manufacturer, is unacceptable.

.8 Remove construction cores when directed by Departmental Representative.

.1 Install permanent cores and ensure locks operate correctly.

3.3 ADJUSTING

.1 Adjust door hardware, operators, closures and controls for optimum, smooth operating condition, safety and for weather tight closure.

.2 Lubricate hardware, operating equipment and other moving parts.

.3 Adjust door hardware to ensure tight fit at contact points with frames.

3.4 CLEANING

.1 Progress Cleaning: clean in accordance with Section 01 11 55 – General Requirements.

.1 Leave Work area clean at end of each day.

.2 Clean hardware with damp rag and approved non-abrasive cleaner, and polish hardware in accordance with manufacturer's instructions.

.3 Remove protective material from hardware items where present.

.4 Final Cleaning: upon completion remove surplus materials, rubbish, tools and equipment in accordance with Section 01 11 55 – General Requirements.

3.5 DEMONSTRATION

.1 Maintenance Staff Briefing:

.1 Brief maintenance staff regarding:

.1 Proper care, cleaning, and general maintenance of projects complete hardware.

.2 Description, use, handling, and storage of keys.

.3 Use, application and storage of wrenches for door closers, locksets, and fire exit hardware.

.2 Demonstrate operation, operating components, adjustment features, and lubrication requirements.

3.6 PROTECTION

.1 Protect installed products and components from damage during construction.

.2 Repair damage to adjacent materials caused by door hardware installation.

3.7 SCHEDULE

.1 **Hardware group No. 1** (D101-1): Entry Door

4	EA.	BUTT HINGES	TA 314 4½ x 4 (NRP)	26D
1	EA.	ENTRY LOCKSET	8225-LNL	26D
1	EA.	ELECTRIC STRIKE	8500 x 851M x E LYNX x SMART PAC	32D
1	EA.	HARNESS	180INOP12PML	
1	EA,	HARNESS	6INMD 12 PML	
1	EA.	POWER SUPPLY	240	
1	EA.	CYLINDER	TO SUIT	26D
1	EA.	O/H STOP	1-336	32D
1	EA.	KICK PLATES	80A (250 x 880)	32D
1	EA	WEATHERSTRIP	379CS	
1	EA.	AUTO BOTTOM	420SL	
1	EA.	THRESHOLD	252x4AFG	

1 EA. CLOSER 3511-O

.2 **Hardware group No. 2** (D101-2, D101-3)

HARDWARE COMPLETE BY DOOR SUPPLIER

.3 **Hardware group No. 3** (D102-1, D103-1, D104-1, D105-1):

1 EA. PADLOCK 758-1 606

REMAINING HARDWARE COMPLETE BY WIRE MESH PARTITION SUPPLIER

END OF SECTION

Part 1 General

1.1 RELATED REQUIREMENTS

.1 Section 05 41 00 – Structural Metal Stud Framing

.2 Section 06 10 00 – Rough Carpentry.

.3 Section 07 84 00 – Fire Stopping.

.4 Section 07 92 00 – Joint Sealants.

.5 Section 08 11 13 – Hollow Metal Doors and Frames.

.6 Section 08 54 13 – Fiberglass Windows.

.7 Section 09 22 16 – Non-Structural Metal Framing.

1.2 REFERENCES

.1 Aluminum Association (AA)

.1 AA DAF 45-03(R2009), Designation System for Aluminum Finishes.

.2 ASTM International

.1 ASTM C475-02(2007), Standard Specification for Joint Compound and Joint Tape for Finishing Gypsum Board.

.2 ASTM C840-08, Standard Specification for Application and Finishing of Gypsum Board.

.3 ASTM C1002-07, Standard Specification for Steel Self-Piercing Tapping Screws for the Application of Gypsum Panel Products or Metal Plaster Bases to Wood Studs or Steel Studs.

.4 ASTM C1047-09, Standard Specification for Accessories for Gypsum Wallboard and Gypsum Veneer Base.

.5 ASTM C1396/C1396M-09a, Standard Specification for Gypsum Wallboard.

.3 Association of the Wall and Ceilings Industries International (AWCI)

.1 AWCI Levels of Gypsum Board Finish-97.

.4 South Coast Air Quality Management District (SCAQMD), California State, Regulation XI. Source Specific Standards

.1 SCAQMD Rule 1113-A2007, Architectural Coatings.

.2 SCAQMD Rule 1168-A2005, Adhesives and Sealants Applications.

.5 Underwriters' Laboratories of Canada (ULC)

.1 CAN/ULC-S102-07, Standard Method of Test of Surface Burning Characteristics of Building Materials and Assemblies.

1.3 ACTION AND INFORMATIONAL SUBMITTALS

.1 Submit in accordance with Section 01 33 00 - Submittal Procedures.

.2 Product Data:

.1 Submit manufacturer's instructions, printed product literature and data sheets for gypsum board assemblies and include product characteristics, performance criteria, physical size, finish and limitations.

1.4 DELIVERY, STORAGE AND HANDLING

.1 Deliver, store and handle materials in accordance with Section 01 61 00 - Common Product Requirements and with manufacturer's written instructions.

.2 Delivery and Acceptance Requirements: deliver materials to site in original factory packaging, labelled with manufacturer's name and address.

.3 Storage and Handling Requirements:

.1 Store gypsum board assemblies' materials level indoors in dry location and in accordance with manufacturer's recommendations in clean, dry, well-ventilated area.

.2 Store and protect gypsum board assemblies from nicks, scratches, and blemishes.

.3 Protect from weather, elements and damage from construction operations.

.4 Handle gypsum boards to prevent damage to edges, ends or surfaces.

.5 Replace defective or damaged materials with new.

1.5 AMBIENT CONDITIONS

.1 Maintain temperature 10 degrees C minimum, 21 degrees C maximum for 48 hours prior to and during application of gypsum boards and joint treatment, and for 48 hours minimum after completion of joint treatment.

.2 Apply board and joint treatment to dry, frost free surfaces.

.3 Ventilation: ventilate building spaces as required to remove excess moisture that would prevent drying of joint treatment material immediately after its application.

Part 2 Products

2.1 MATERIALS

.1 Standard board: to ASTM C1396/C1396M regular, 16 mm thick and Type X, 16 mm thick, 1200 mm wide x maximum practical length, ends square cut, edges squared.

.2 Steel drill screws: to ASTM C1002, self-drilling, self-threading case hardened with Philips-type head. Lengths should be suitable for penetrations of 12 mm minimum into metal furring or metal studs.

.1 Use 25 or 31 mm long minimum #6 Type S or S-12 wafer of bugle head self-tapping corrosion resistant screws for exterior sheathing.

.2 Use 31 mm long corrosion resistant #8 flat wafer head screws with a minimum 10 mm head diameter with counter-sinking ribs for moisture-resistant board.

.3 Sealants: in accordance with Section 07 92 00 - Joint Sealants.

.1 VOC limit 250 g/L maximum to SCAQMD Rule 1168.

.2 Acoustic sealant: to CAN/CGSB 19-21 one component, gun grade, non-staining, non-hardening, permanently flexible synthetic rubber.

.1 Acceptable product: Tremco Acoustical Sealant or acceptable substitution.

.4 Joint Treatment Material: Joint compound, joint tape and taping compound to conform to ASTM C475.

.1 Tape: 50 mm spark perforated paper tape of type recommended by manufacturer of gypsum board products.

.2 Jointing Compound: Casein, vinyl or latex base, slow setting, bedding and finishing compounds of type recommended by manufacturer of gypsum board.

.3 Wet Areas Joint Treatment:

.1 Joint Tape: 50 mm wide, 10 x 10 glass mesh tape.

.2 Reinforcing Fabric: Balanced, alkali-resistant open-weave glass fiber fabric, 4.30 oz/yd2, conforming to ASTM D 1682 and ASTM D 578.

.3 Joint Compound: Portland Cement formulation complying with ASTM C 150 Type I.

.4 Water: Fresh, clean, potable water free from deleterious matter, acids or alkalis.

Part 3 Execution

3.1 EXAMINATION

.1 Verification of Conditions: verify conditions of substrates previously installed under other Sections or Contracts are acceptable for gypsum board assemblies installation in accordance with manufacturer's written instructions.

3.2 ERECTION

.1 Do application and finishing of gypsum board to ASTM C840 except where specified otherwise.

.2 Install work level to tolerance of 1:1200.

3.3 APPLICATION

.1 Apply gypsum board after bucks, anchors, blocking, sound attenuation, electrical and mechanical work have been approved.

.2 Plan installation of butt-end joints to reduce the amount of joint finishing.

.3 Cut sheets to fit accurately, butt edges of boards in moderate contact, do not force into place. Remove ragged edges or burrs with rasp or sandpaper.

.4 Cut gypsum board by scoring and breaking, or by sawing, working from the face side. When cut by scoring, cut through the face paper with a sharp knife; snap back the gypsum board from the cut face. Score cutouts for pipes, fixtures or other small openings in outline on both sides before knocking out or cut out with a saw.

.5 Set all ends and edges of gypsum board over framing members. Erect with length of the sheet at right angles to the supports.

.6 Include all cutting and fitting of gypsum board to accommodate recessed items in framing, and to accommodate piping and duct penetrations in partitions.

.7 Install gypsum board on walls vertically to avoid end-butt joints. At stairwells and similar high walls, install boards horizontally with end joints staggered over studs, except where local codes or fire-rated assemblies require vertical application.

.8 Install gypsum board with face side out.

.9 Do not install damaged or damp boards.

.10 Locate edge or end joints over supports. Stagger vertical joints over different studs on opposite sides of wall.

3.4 SINGLE LAYER APPLICATION

.1 Apply gypsum board on ceilings prior to application of walls to ASTM C840.

.2 Erect gypsum board vertically or horizontally, whichever results in fewer end joints. Locate end joints over supporting members.

.3 Keep end joints away from prominent locations and central partitions of ceilings.

.4 Drive screws with a power screw-gun and set with countersunk heads slightly below the surface of the gypsum board. Do not break the surface of the board.

.5 Install perimeter screws between 9 mm and 12 mm from edges and ends, opposite the screws on adjacent boards. Space screws for other areas on 300 mm centres in field.

.6 Space screws for fire rated gypsum board on 200 mm centres at edges and on 300 mm centres on board fields on walls and on 200 mm centres on ceilings unless otherwise required by ULC Design Test assembly for fire rating specified.

.7 Ensure fasteners do not contact framing behind resilient channels.

3.5 INSTALLATION

.1 Finish face panel joints and internal angles with joint system consisting of joint compound, joint tape and taping compound installed according to manufacturer's directions and feathered out onto panel faces.

.2 Gypsum Board Finish: finish gypsum board walls and ceilings to following levels in accordance with AWCI Levels of Gypsum Board Finish:

.1 Levels of Finish:

.1 Level 1: embed tape for joints and interior angles in joint compound. Surfaces to be free of excess joint compound; tool marks and ridges are acceptable.

.1 Location: Ceiling spaces and unexposed plenums.

3.6 CLEANING

.1 Progress and Final Cleaning: clean in accordance with Section 01 11 55 – General Instructions.

.1 Leave Work area clean at end of each day.

.2 Final Cleaning: upon completion remove surplus materials, rubbish, tools and equipment.

3.7 PROTECTION

.1 Protect installed products and components from damage during construction.

.2 Repair damage to adjacent materials caused by gypsum board assemblies' installation.

END OF SECTION

Part 1 General

1.1 RELATED REQUIREMENTS

.1 Section 03 30 00 – Cast-in-Place Concrete.

.2 Section 09 21 16 – Gypsum Board Assemblies.

.3 Section 09 91 00 – Painting.

1.2 REFERENCES

.1 American Society for Testing and Materials International (ASTM)

.1 ASTM F1913, Standard Specification for Vinyl Sheet Floor Covering Without Backing.

.2 Health Canada/Workplace Hazardous Materials Information System (WHMIS)

.1 Material Safety Data Sheets (MSDS).

.3 South Coast Air Quality Management District (SCAQMD), California State

.1 SCAQMD Rule 1113-04, Architectural Coatings.

.2 SCAQMD Rule 1168-05, Adhesives and Sealants Applications.

1.3 ACTION AND INFORMATIONAL SUBMITTALS

.1 Provide product data in accordance with Section 01 33 00 - Submittal Procedures.

1.4 QUALITY ASSURANCE

.1 Installation of flooring materials to be performed by Journeypersons with one or more of the following qualifications:

.1 Provincial Trades Qualification.

.2 Federal Red-Seal Certification.

.3 INSTALL Certification.

1.5 DELIVERY, STORAGE AND HANDLING

.1 Deliver, store and handle materials in accordance manufacturer's written instructions.

1.6 AMBIENT CONDITIONS

.1 Maintain air temperature and structural base temperature at base installation area above 20 degrees for 48 hours before, during and 48 hours after installation.

Part 2 Products

2.1 MATERIALS

.1 Resilient base: to CAN/CSA-A126.5, continuous, top set, complete with premoulded end stops and external corners:

.1 Type: vinyl, 2.0 mm thick

.2 Style: cove.

.3 Height: 101.6 mm.

.4 Lengths: cut lengths minimum 2400 mm.

.5 Colour: selected by Departmental Representative from manufacturer's standard colour range.

.6 Acceptable material: Armstrong, Johnsonite, Flexco, Roppe.

.2 Primers and adhesives: of types recommended by resilient flooring manufacturer for specific material on applicable substrate, above, on or below grade.

.1 Cove base adhesives:

.1 Adhesive: maximum VOC limit 50 g/L to SCAQMD Rule 1168.

Part 3 Execution

3.1 MANUFACTURER'S INSTRUCTIONS

.1 Compliance: comply with manufacturer's written recommendations or specifications, including product technical bulletins, handling, storage and installation instructions, and datasheets.

3.2 SITE VERIFICATION OF CONDITIONS

.1 Install base materials to approved substrates only after all other trades, especially gypsum board and painting, have been completed.

.2 Do not proceed with installation until all unsatisfactory conditions have been corrected and ensure that all surfaces to receive resilient flooring are clean, dry and smooth and free from paint, varnish, oils, release agents, waxes, sealers and curing and hardening compounds not compatible with adhesives employed.

3.3 PREPARATION

.1 Confirm that curing, hardening and sealing compounds have not been applied to concrete slab in conformance with resilient flooring manufacturer's printed instructions.

3.4 APPLICATION: BASE

.1 Lay out base to keep number of joints at minimum.

.2 Clean substrate and prime with one coat of adhesive.

.3 Apply adhesive to back of base.

.4 Set base against wall and floor surfaces tightly by using 3 kg hand roller.

.5 Install straight and level to variation of 1:1000.

.6 Scribe and fit to door frames and other obstructions. Use premoulded end pieces at flush door frames.

.7 Cope internal corners. Wrap around for right angle external corners.

.8 Apply bead of caulking at top and bottom edges of base or a continuous bead of sealant at the top and bottom edges prior to installation on the wall.

3.5 CLEANING

.1 Proceed in accordance with Section 01 11 55 – General Instructions.

.2 Remove excess adhesive from floor, base and wall surfaces without damage.

.3 Clean base surface to flooring manufacturer's printed instructions.

END OF SECTION

Part 1 General

1.1 RELATED REQUIREMENTS

.1 Section 03 30 00 – Cast-in-Place Concrete

.2 Section 06 10 53 – Miscellaneous Rough Carpentry.

.3 Section 08 11 00 – Metal Doors and Frames.

.4 Section 09 21 16 – Gypsum Board Assemblies.

.5 Mechanical.

.6 Electrical.

1.2 REFERENCES

.1 Department of Justice Canada (Jus)

.1 Canadian Environmental Protection Act (CEPA), 1999, c. 33

.2 Environmental Protection Agency (EPA)

.1 Test Method for Measuring Total Volatile Organic Compound Content of Consumer Products, Method 24 (for Surface Coatings).

.3 Health Canada/Workplace Hazardous Materials Information System (WHMIS)

.1 Material Safety Data Sheets (MSDS).

.4 The Master Painters Institute (MPI)

.1 Architectural Painting Specification Manual - February 2010.

.2 MPI Approved Product list, Latest Edition.

.3 Standard GPS-1-05, MPI Green Performance Standard for Painting and Coatings.

.5 National Fire Code of Canada – 2010.

.6 Society for Protective Coatings (SSPC)

.1 Systems and Specifications, SSPC Painting Manual 2005.

.7 Transport Canada (TC)

.1 Transportation of Dangerous Goods Act (TDGA), 1992, c. 34.

1.3 QUALITY ASSURANCE

.1 Qualifications:

.1 Contractor: to have a minimum of five years proven satisfactory experience. When requested, provide list of last three comparable jobs including, job name and location, specifying authority, and project manager.

.2 Qualified journeypersons is a certified journeyperson of a non-certified trades person who has a minimum of 7,200 hours or five (5) years' experience in this trade.

.3 Apprentices: may be employed provided they work under direct supervision of qualified journeyperson in accordance with trade regulations.

.4 Conform to latest MPI requirements for painting work including preparation and priming.

.5 Materials: in accordance with MPI Painting Specification Manual "Approved Product" listing and from a single manufacturer for each system used.

.6 Paint materials such as linseed oil, shellac, and turpentine to be highest quality product of an approved manufacturer listed in MPI Painting Specification Manual and to be compatible with other coating materials as required.

.7 Retain purchase orders, invoices and documents to prove conformance with noted MPI requirements when requested Departmental Representative.

.8 Standard of Acceptance:

.1 Walls: No defects visible from a distance of 1000 mm at 90 degrees to surface.

.2 Final coat to exhibit uniformity of colour and uniformity of sheen across full surface area.

1.4 PERFORMANCE REQUIREMENTS

.1 Environmental Performance Requirements:

.1 Provide paint products meeting MPI "Environmentally Friendly" E2 ratings based on VOC (EPA Method 24) content levels.

.2 Green Performance in accordance with MPI Standard GPS-1.

1.5 ACTION AND INFORMATIONAL SUBMITTALS

.1 Provide submittals in accordance with Section 01 33 00 - Submittal Procedures.

.2 Product Data:

.1 Submit manufacturer's printed product literature, specifications and datasheet and include product characteristics, performance criteria, physical size, finish and limitations.

.2 Submit WHMIS MSDS - Material Safety Data Sheets in accordance with Section 02 81 01 - Hazardous Materials.

.3 Provide samples in accordance with Section 01 33 00 - Submittal Procedures.

.1 Submit 100 x 100 mm sample panels of each paint, stain, and clear coating with specified paint or coating in colours, gloss/sheen and textures required to MPI Painting Specification Manual standards submitted on the following substrate materials:

.1 3 mm plate steel for finishes over metal surfaces.

.2 13 mm birch plywood for finishes over wood surfaces.

.3 13 mm gypsum board for finishes over gypsum board and other smooth surfaces.

.4 10 mm plywood for finishes over wood surfaces.

.2 When approved, samples shall become acceptable standard of quality for appropriate on-site surface with one of each sample retained on-site.

.3 Submit full range of available colours where colour availability is restricted.

.4 Closeout Submittals: submit maintenance data for incorporation into manual specified in Section 01 78 00 - Closeout Submittals include following:

.1 Product name, type and use.

.2 Manufacturer's product number.

.3 Colour numbers.

.4 MPI Environmentally Friendly classification system rating.

1.6 MAINTENANCE

.1 Extra Materials:

.1 Submit maintenance materials in accordance with Section 01 78 00 - Closeout Submittals.

.2 Submit one, four litre can of each type and colour of finish coating. Identify colour and paint type in relation to established colour schedule and finish system.

1.7 DELIVERY, STORAGE AND HANDLING

.1 Packing, Shipping, Handling and Unloading:

.1 Pack, ship, handle and unload materials in accordance with Section 01 61 00 - Common Product Requirements and manufacturer's written instructions.

.2 Acceptance at Site:

.1 Identify products and materials with labels indicating:

.1 Manufacturer's name and address.

.2 Type of paint or coating.

.3 Compliance with applicable standard.

.4 Colour number in accordance with established colour schedule.

.3 Remove damaged, opened and rejected materials from site.

.4 Storage and Protection:

.1 Provide and maintain dry, temperature controlled, secure storage.

.2 Store materials and supplies away from heat generating devices.

.3 Store materials and equipment in well-ventilated area with temperature range 7 degrees C to 30 degrees C.

.5 Store temperature sensitive products above minimum temperature as recommended by manufacturer.

.6 Keep areas used for storage, cleaning and preparation clean and orderly. After completion of operations, return areas to clean condition.

.7 Remove paint materials from storage only in quantities required for same day use.

.8 Fire Safety Requirements:

.1 Provide one 9 kg Type ABC fire extinguisher adjacent to storage area.

.2 Store oily rags, waste products, empty containers and materials subject to spontaneous combustion in ULC approved, sealed containers and remove from site on a daily basis.

.3 Handle, store, use and dispose of flammable and combustible materials in accordance with National Fire Code of Canada requirements.

1.8 AMBIENT CONDITIONS

.1 Heating, Ventilation and Lighting:

.1 Ventilate enclosed spaces in accordance with Section 01 50 00 – Temporary Facilities and Controls.

.2 Do not perform painting work unless adequate and continuous ventilation and sufficient heating facilities are in place to maintain ambient air and substrate temperatures above 10 degrees C for24 hours before, during and after paint application until paint has cured sufficiently.

.3 Where required, provide continuous ventilation for seven days after completion of application of paint.

.4 Provide temporary ventilating and heating equipment where permanent facilities are not available or supplemental ventilating and heating equipment if ventilation and heating from existing system is inadequate to meet minimum requirements.

.5 Perform no painting work unless a minimum lighting level of 323 Lux is provided on surfaces to be painted. Adequate lighting facilities to be provided by General Contractor.

.2 Temperature, Humidity and Substrate Moisture Content Levels:

.1 Unless specifically pre-approved by specifying body, Paint Inspection Agency and, applied product manufacturer, perform no painting work when:

.1 Ambient air and substrate temperatures are below 10 degrees C.

.2 Substrate temperature is over 32 degrees C unless paint is specifically formulated for application at high temperatures.

.3 Substrate and ambient air temperatures are expected to fall outside MPI or paint manufacturer's prescribed limits.

.4 Relative humidity is above 85 % or when dew point is less than 3 degrees C variance between air/surface temperature.

.5 Rain or snow are forecast to occur before paint has thoroughly cured or when it is foggy, misty, raining or snowing at site.

.2 Perform no painting work when maximum moisture content of substrate exceeds:

.1 12% for concrete and masonry (clay and concrete brick/block).

.2 15% for wood.

.3 12% for plaster and gypsum board.

.3 Conduct moisture tests using a properly calibrated electronic Moisture Meter, except test concrete floors for moisture using a simple "cover patch test".

.4 Test concrete, masonry and plaster surfaces for alkalinity as required.

.3 Surface and Environmental Conditions:

.1 Apply paint finish in areas where dust is no longer being generated by related construction operations or when wind or ventilation conditions are such that airborne particles will not affect quality of finished surface.

.2 Apply paint to adequately prepared surfaces and to surfaces within moisture limits noted herein.

.3 Apply paint when previous coat of paint is dry or adequately cured.

.4 Apply paint finishes when conditions forecast for entire period of application fall within manufacturer's recommendations.

.5 Do not apply paint when:

.1 Temperature is expected to drop below 10 degrees C before paint has thoroughly cured.

.2 Substrate and ambient air temperatures are expected to fall outside MPI or paint manufacturer's limits.

.3 Surface to be painted is wet, damp or frosted.

.6 Provide and maintain cover when paint must be applied in damp or cold weather. Heat substrates and surrounding air to comply with temperature and humidity conditions specified by manufacturer. Protect until paint is dry or until weather conditions are suitable.

.7 Schedule painting operations such that surfaces exposed to direct, intense sunlight are scheduled for completion during early morning.

.8 Remove paint from areas which have been exposed to freezing, excess humidity, rain, snow or condensation. Prepare surface again and repaint.

.4 Additional interior application requirements:

.1 Apply paint finishes when temperature at location of installation can be satisfactorily maintained within manufacturer's recommendations.

Part 2 Products

2.1 MATERIALS

.1 Materials and resources in accordance with Section 01 35 13 – Special Project Procedures.

.2 Paint materials listed in latest edition of MPI Approved Products List (APL) are acceptable for use on this project.

.3 Paint materials for paint systems: to be products of single manufacturer.

.4 Only qualified products with E2 "Environmentally Friendly" rating are acceptable for use on this project.

.5 Conform to latest MPI requirements for interior and exterior painting work including preparation and priming.

.6 Linseed oil, shellac, and turpentine: highest quality product from approved manufacturer listed in MPI Architectural Painting Specification Manual, compatible with other coating materials as required.

.7 Water-borne surface coatings must be manufactured and transported in a manner that steps of processes, including disposal of waste products arising therefrom, will meet requirements of applicable governmental acts, by-laws and regulations including, for facilities located in Canada, Fisheries Act and Canadian Environmental Protection Act (CEPA).

.8 Water-borne surface coatings must not be formulated or manufactured with aromatic solvents, formaldehyde, halogenated solvents, mercury, lead, cadmium, hexavelant chromium or their compounds.

.9 Water-borne surface coatings and recycled water-borne surface coatings must have flash point of 61.0 degrees C or greater.

.10 Water-borne paints and stains, recycled water-borne surface coatings and water borne varnishes must meet a minimum "Environmentally Friendly" E2 rating.

2.2 COLOURS

.1 Departmental Representative will provide Colour Schedule after Contract award.

.2 Colour schedule will be based upon selection of five base colours and three accent colours. No more than eight colours will be selected for entire project and no more than three colours will be selected in each area.

.3 Selection of colours will be from manufacturer’s full range of colours.

.4 Where specific products are available in restricted range of colours, selection will be based on limited range.

.5 Second coat in three coat system to be tinted slightly lighter colour than top coat to show visible difference between coats.

2.3 MIXING AND TINTING

.1 Perform colour tinting operations prior to delivery of paint to site. On-site tinting of painting materials is allowed only with Departmental Representative's written permission.

.2 Mix paste, powder or catalyzed paint mixes in accordance with manufacturer's written instructions.

.3 Add thinner to paint manufacturer's recommendations. Do not use kerosene or organic solvents to thin water-based paints.

.4 Thin paint for spraying according in accordance with paint manufacturer's instructions. If directions are not on container, obtain instructions in writing from manufacturer and provide copy of instructions to Departmental Representative.

.5 Re-mix paint in containers prior to and during application to ensure break-up of lumps, complete dispersion of settled pigment, and colour and gloss uniformity.

2.4 GLOSS/SHEEN RATINGS

.1 Paint gloss: defined as sheen rating of applied paint, in accordance with following values:

Gloss Level Category/	Units @ 60 Degrees/	Units @ 85 Degrees/
G1 - matte finish	0 to 5	max. 10
G2 - velvet finish	0 to 10	10 to 35
G3 - eggshell finish	10 to 25	10 to 35
G4 - satin finish	20 to 35	min. 35
G5 - semi-gloss finish	35 to 70	
G6 - gloss finish	70 to 85	
G7 - high gloss finish	85	

.2 Gloss level ratings of painted surfaces as noted on Finish Schedule.

2.5 EXTERIOR PAINTING SYSTEMS

.1 Steel Bollards:

.1 EXT 5.1D - Alkyd G5 finish, Premium Grade.

.2 Galvanized Metal: not chromate passivated (Exterior Metal Doors)

.1 EXT 5.3J - Waterborne light industrial G5 coating (over waterborne primer), Premium Grade.

2.6 INTERIOR PAINTING SYSTEMS

.1 Concrete horizontal surfaces:

.1 Concrete Hardener, Sealer and Dustproofer, Waterborne, 2 coats

.2 Acceptable Products: MasterKure HD 300WB by BASF; Seal Hard 400 by Sternson.

.2 Galvanized metal: doors, frames, railings, misc. steel, pipes, overhead decking, and ducts.

.1 INT 5.3M - High performance architectural latex G5 finish, Premium Grade.

.3 Wood paneling and casework: partitions, panels, shelving, millwork:

.1 INT 6.4S – High performance architectural latex G5 finish, Premium Grade.

.4 Refer to finish schedule for colour selections.

Part 3 Execution

3.1 MANUFACTURER'S INSTRUCTIONS

.1 Compliance: comply with manufacturer's written recommendations or specifications, including product technical bulletins, handling, storage and installation instructions, and datasheets.

3.2 EXAMINATION

.1 Investigate existing substrates for problems related to proper and complete preparation of surfaces to be painted. Report to Departmental Representative damages, defects, unsatisfactory or unfavourable conditions before proceeding with work.

.2 Conduct moisture testing of surfaces to be painted using properly calibrated electronic moisture meter, except test concrete floors for moisture using simple "cover patch test". Do not proceed with work until conditions fall within acceptable range as recommended by manufacturer.

.3 Maximum moisture content as follows:

.1 Stucco, plaster and gypsum board: 12%.

.2 Concrete: 12%.

.3 Wood: 15%.

3.3 PREPARATION

.1 Protection:

.1 Protect existing building surfaces and adjacent structures from paint spatters, markings and other damage by suitable non-staining covers or masking. If damaged, clean and restore surfaces as directed Departmental Representative.

.2 Protect items that are permanently attached such as Fire Labels on doors and frames.

.3 Protect factory finished products and equipment.

.2 Clean and prepare surfaces in accordance with MPI Architectural Painting Specification Manual requirements. Refer to MPI Manual in regard to specific requirements and as follows:

.1 Remove dust, dirt, and other surface debris by vacuuming, wiping with dry, clean cloths or compressed air.

.2 Wash surfaces with a biodegradable detergent and bleach where applicable and clean warm water using a stiff bristle brush to remove dirt, oil and other surface contaminants.

.3 Rinse scrubbed surfaces with clean water until foreign matter is flushed from surface.

.4 Allow surfaces to drain completely and allow to dry thoroughly.

.5 Prepare surfaces for water-based painting, water-based cleaners should be used in place of organic solvents.

.6 Use trigger operated spray nozzles for water hoses.

.3 Many water-based paints cannot be removed with water once dried. Minimize use of mineral spirits or organic solvents to clean up water-based paints.

.4 Apply paint materials in accordance with paint manufacturer's written application instructions.

.5 Prevent contamination of cleaned surfaces by salts, acids, alkalis, other corrosive chemicals, grease, oil and solvents before prime coat is applied and between applications of remaining coats. Apply primer, paint, or pre-treatment as soon as possible after cleaning and before deterioration occurs.

.6 Where possible, prime non-exposed surfaces of new wood surfaces before installation. Use same primers as specified for exposed surfaces.

.1 Apply vinyl sealer to MPI #36 over knots, pitch, sap and resinous areas.

.2 Apply wood filler to nail holes and cracks.

.3 Tint filler to match stains for stained woodwork.

.7 Clean metal surfaces to be repainted by removing rust, dirt, oil, grease and foreign substances in accordance with MPI requirements. Remove such contaminates from surfaces, pockets and corners to be repainted by brushing with clean brushes, blowing with clean dry compressed air, or brushing/vacuum cleaning as required.

.8 Prevent contamination of cleaned surfaces by salts, acids, alkalis, other corrosive chemicals, grease, oil and solvents before priming and between applications of remaining coats. Touch-up, spot prime, and apply primer, paint, or pre-treatment as soon as possible after cleaning and before deterioration occurs.

.9 Do not apply paint until prepared surfaces have been accepted Departmental Representative.

.10 Sand and dust between coats as required to provide adequate adhesion for next coat and to remove defects visible from a distance up to 1000 mm.

3.4 APPLICATION

.1 Minimum painting standards shall be in accordance with MPI Architectural Painting Manual Premium Grade finish requirements.

.2 Apply up to four coats of paint where deep or bright colours are used to achieve satisfactory results.

.3 Method of application to be as approved by Departmental Representative. Conform to manufacturer's application instructions unless specified otherwise.

.4 Brush and Roller Application:

.1 Apply paint in a uniform layer using brush and/or roller of types suitable for application.

.2 Work paint into cracks, crevices and corners.

.3 Paint surfaces and corners not accessible to brush using spray, daubers and/or sheepskins. Paint surfaces and corners not accessible to roller using brush, daubers or sheepskins.

.4 Brush and/or roll out runs and sags, and over-lap marks. Rolled surfaces shall be free of roller tracking and heavy stipple unless approved by Departmental Representative.

.5 Remove runs, sags and brush marks from finished work and repaint.

.5 Spray Application:

.1 Provide and maintain equipment that is suitable for intended purpose, capable of properly atomizing paint to be applied, and equipped with suitable pressure regulators and gauges.

.2 Keep paint ingredients properly mixed in containers during paint application either by continuous mechanical agitation or by intermittent agitation as frequently as necessary.

.3 Apply paint in a uniform layer, with overlapping at edges of spray pattern.

.4 Brush out immediately runs and sags.

.5 Use brushes to work paint into cracks, crevices and places which are not adequately painted by spray.

.6 Use dipping, sheepskins or daubers when no other method is practical in places of difficult access and when specifically authorized by Departmental Representative.

.7 Apply coats of paint as continuous film of uniform thickness. Repaint thin spots or bare areas before next coat of paint is applied.

.8 Allow surfaces to dry and properly cure after cleaning and between subsequent coats for minimum time period as recommended by manufacturer.

.9 Sand and dust between coats to remove visible defects.

.10 Finish surfaces both above and below sight lines as specified for surrounding surfaces, including such surfaces as projecting ledges.

.11 Finish inside of cupboards and cabinets as specified for outside surfaces.

.12 Finish closets and alcoves as specified for adjoining rooms.

.13 Finish top, bottom, edges and cut-outs of doors after fitting as specified for door surfaces.

3.5 MECHANICAL/ELECTRICAL EQUIPMENT

.1 Paint finished area exposed conduits, piping, hangers, ductwork and other mechanical and electrical equipment with colour and finish to match adjacent surfaces, except as indicated.

.2 Boiler room, mechanical and electrical rooms: paint exposed conduits, piping, hangers, ductwork and other mechanical and electrical equipment.

.3 Other unfinished areas: leave exposed conduits, piping, hangers, ductwork and other mechanical and electrical equipment in original finish and touch up scratches and marks.

.4 Touch up scratches and marks on factory painted finishes and equipment with paint as supplied by manufacturer of equipment.

.5 Do not paint over nameplates.

.6 Keep sprinkler heads free of paint.

.7 Paint inside of ductwork where visible behind grilles, registers and diffusers with primer and one coat of matt black paint.

.8 Paint fire protection piping red.

.9 Paint disconnect switches for fire alarm system and exit light systems in red enamel.

.10 Paint propane gas piping yellow.

.11 Paint both sides and edges of backboards for telephone and electrical equipment before installation. Leave equipment in original finish except for touch-up as required, and paint conduits, mounting accessories and other unfinished items.

.12 Do not paint interior transformers and substation equipment.

3.6 SITE TOLERANCES

.1 Walls: no defects visible from a distance of 1000 mm at 90 degrees to surface.

.2 Ceilings: no defects visible from floor at 45 degrees to surface when viewed using final lighting source.

.3 Final coat to exhibit uniformity of colour and uniformity of sheen across full surface area.

3.7 CLEANING

.1 Proceed in accordance with Section 01 11 55 – General Instructions.

.1 Remove paint where spilled, splashed, splattered or sprayed as work progresses using means and materials that are not detrimental to affected surfaces.

END OF SECTION

Part 1 General

1.1 REFERENCE STANDARDS

.1 CSA Group

.1 CSA G40.20/G40.21-13, General Requirements for Rolled or Welded Structural Quality Steel/Structural Quality Steel.

.2 CSA W59-13, Welded Steel Construction (Metal Arc Welding).

1.2 ACTION AND INFORMATIONAL SUBMITTALS

.1 Submit in accordance with Section 01 33 00- Submittal Procedures.

.2 Product Data:

.1 Submit manufacturer's instructions, printed product literature and data sheets for [wire mesh partitions] and include product characteristics, performance criteria, physical size, finish and limitations.

.3 Shop Drawings:

.1 Indicate partition panel modules and types, materials, gauges, finishes, door and other openings, hardware, fastening methods to adjacent structure, ceiling details, and assembly methods.

1.3 DELIVERY, STORAGE AND HANDLING

.1 Deliver, store and handle materials in accordance with manufacturer's written instructions.

Part 2 Products

2.1 MANUFACTURER

.1 Standard of Acceptance: Cogan Wire Mesh Partitions

2.2 MATERIALS

.1 Partition mesh: painted.

.1 Welded mesh: 50mm x 50mm opening size, framed edge.

.2 Steel sections and plates: to CSA G40.20/G40.21, type 44W.

.1 Posts: hollow steel tubing, square 50 x 50 mm, welded, painted construction, designed to fasten to floors and ceiling, minimum wall thickness 16 gauge.

.2 Extension posts: 44 x 44 mm hollow steel tubing, minimum wall thickness [1.6] mm.

.3 Angle frame: 32 x 32 x 3 mm.

.4 Base Plate: Minimum 150 x 150 x 6 mm.

.3 Welding materials: to CSA W59.

.4 Bolts, fasteners and fastening hardware: manufacturer's standard to suit design and application.

2.3 ACCESSORIES

.1 Master Key Systems, Deadlocks and Locksets: refer to Section 08 71 00 - Hardware.

2.4 FABRICATION

.1 Panels:

.1 Fabricate panels 2400 x 1200 mm and special sizes or shapes as required consisting of wire mesh welded at 100 mm on centre to angle frame.

.2 Mitre and weld frame corners.

.3 Provide 20 x 6 mm flat bars across panels at third points on 2400 mm dimension.

.2 Posts (Top Fix):

.1 Posts to extend from floor to ceiling with floor and ceiling plates for fixing.

.2 Include corner, wall, door and other special posts to manufacturer's standard.

.3 Post extensions:

.1 Length required to telescope 300 mm into post and extend posts to ceiling.

.2 Weld ceiling plate on upper end for fixing.

.3 Supply extension posts as required.

.4 Swing doors: standard doors:

.1 900 x 2400.

.2 Construct doors and transom above of angle frame with wire mesh, same as panels.

.3 Reinforce door with 40 x 5 mm or equivalent flat bar centre rail and 20 x 6 mm or equivalent flat bar bracing from centre rail to opposite corners on hinge side.

.5 Swing door hardware:

.1 Equip doors with stops, keeper, hasp for.

.2 Equip standard doors with 1-1/2 pair of butts.

2.5 FINISHES

.1 After fabrication, clean and paint components with manufacturer's standard primer and 2 coat enamel finish.

.1 Standard colour selected by Departmental Representative.

Part 3 Execution

3.1 EXAMINATION

.1 Verification of Conditions: verify that conditions of substrate previously installed under other Sections or Contracts are acceptable for wire mesh partitions installation in accordance with manufacturer's written instructions.

3.2 ERECTION

.1 Install mesh enclosures and doors in accordance with manufacturer's printed instructions.

.2 Erect enclosures plumb, level, straight, rigidly supported, and securely fastened to abutting surfaces, free from superimposed loads.

.3 Fix to concrete using lag bolts and shields; to hollow walls using bolts and toggle type anchors; to steel supports with bolts in threaded holes or spot welds.

.1 Locate fasteners on interior side where possible for maximum security.

.4 Install doors and adjust for proper closing, locking and smooth operation.

3.3 CLEANING

.1 Progress and Final Cleaning: clean in accordance with Section 01 11 55 – General Instructions.

.1 Leave Work area clean at end of each day.

END OF SECTION

Part 1 General

1.1 RELATED REQUIREMENTS

.1 This Section of the specification forms part of the Contract Documents and is to be read, interpreted and coordinated with all other parts.

1.2 REFERENCE STANDARDS

.1 All referenced standards shall be to the most recent edition.

.2 National Fire Protection Association (NFPA)

.1 NFPA 10, Standard for Portable Fire Extinguishers.

1.3 ACTION AND INFORMATIONAL SUBMITTALS

.1 Provide submittals in accordance with Section 01 33 00- Submittal Procedures.

.2 Product Data:

.1 Submit manufacturer's printed product literature and datasheet and include product characteristics, performance criteria, physical size, finish and limitations.

.3 Provide shop drawings.

.4 Closeout Submittals:

.1 Provide operation and maintenance data for incorporation into manual specified in Section 01 78 00- Closeout Submittals.

1.4 DELIVERY, STORAGE AND HANDLING

.1 Packing, shipping, handling and unloading:

.1 Deliver, store and handle materials in accordance with Section 01 61 00- Common Product Requirements.

Part 2 Products

2.1 MULTI-PURPOSE DRY CHEMICAL EXTINGUISHERS

.1 Stored pressure rechargeable type with hose and shut-off nozzle, ULC labelled for A, B and C class protection.

.1 Size as indicated on the plans.

2.2 EXTINGUISHER BRACKETS

.1 Type recommended by extinguisher manufacturer.

2.3 IDENTIFICATION

.1 Identify extinguishers in accordance with recommendations of CAN/ULC-S508 and NFPA 10.

.2 Attach tag or label to extinguishers, indicating month and year of installation. Provide space for service dates.

Part 3 Execution

3.1 MANUFACTURER'S INSTRUCTIONS

.1 Compliance: comply with manufacturer's written recommendations, including product technical bulletins, handling, storage and installation instructions, and datasheets.

3.2 INSTALLATION

.1 Install or mount extinguishers in cabinets or on brackets in accordance with NFPA 10 as indicated.

END OF SECTION

Part 1 General

1.1 SECTION INCLUDES

.1 Workstations

.2 Metal Storage Shelving

1.2 ACTION AND INFORMATIONAL SUBMITTALS

.1 Provide submittals in accordance with Section 01 33 00- Submittal Procedures.

.2 Product Data:

.1 Submit manufacturer's printed product literature and datasheet and include product characteristics, performance criteria, physical size, finish and limitations.

.3 Shop drawings: Submit drawings supplemented as follows:

.1 Indicate cabinet and shelving layouts, number of bays, shelves, pullout shelves, dividers, end panels, type and location of signage, and anchoring devices.

.4 Closeout Submittals:

.1 Provide operation and maintenance data for incorporation into manual specified in Section 01 78 00- Closeout Submittals.

1.3 DELIVERY, STORAGE AND HANDLING

.1 Packing, shipping, handling and unloading:

.1 Deliver, store and handle materials in accordance with manufacturer's written instructions.

Part 2 Products

2.1 MATERIALS

.1 Workbench:

.1 Depth: 762 mm

.2 Length: 3,048 mm

.3 Height: 1,010 mm

.4 Configuration: As indicated

.5 Quantity: 1

.6 Standard of Acceptance: Rousseau Workstation

.2 Storage Shelving:

.1 Depth: 762 mm

.2 Length: 4,880 mm total length (minimum)

.3 Height: 1,900 mm.

.4 Number of Shelves: 6

.5 Shelf Capacity: 300 lbs.

.6 Standard of Acceptance: Rousseau Record Storage Mini-Racking

2.2 COMPONENTS

.1 Work Surface: Wood.

.2 Drawers: Painted steel

.3 Uprights: Painted steel with slots at 25mm centres.

.4 Shelves: Painted Steel solid deck.

.5 Pegboard: Painted steel.

.6 Anchoring devices: As recommended by manufacturer

2.3 FINISHES

.1 Two coat baked enamel finish system in manufacturer standard colour selected by Departmental Representative

Part 3 Execution

3.1 MANUFACTURER'S INSTRUCTIONS

.1 Compliance: comply with manufacturer's written recommendations, including product technical bulletins, handling, storage and installation instructions, and datasheets.

3.2 INSTALLATION

.1 Do metal shelving work in accordance with manufacturer's written instructions except where specified otherwise.

.2 Install metal shelving to manufacturer's instructions and as per approved layout.

.3 Brace, secure and anchor shelving units in place.

3.3 CLEANING

.1 Clean in accordance with Section 01 11 55 – General Instructions.

.2 Clean all surfaces after installation using manufacturer's recommended cleaning procedures.

END OF SECTION

Part 1 General

1.1 RELATED REQUIREMENTS

.1 This Section of the specification forms part of the Contract Documents and is to be read, interpreted and coordinated with all other parts.

.2 The General Conditions, Supplements, Amendments and Mechanical General Requirement shall govern the plumbing sections. This section covers items common to Div. 22.

1.2 REFERENCE STANDARDS

.1 All referenced standards shall be to the most recent edition.

.2 National Research Council Canada (NRCC)

.1 National building Code of Canada (NBCC).

.2 National Plumbing Code of Canada (NPCC).

1.3 ACTION AND INFORMATIONAL SUBMITTALS

.1 Submit in accordance with Section 01 33 00- Submittal Procedures.

.2 Product Data:

.1 Submit manufacturer's instructions, printed product literature and data sheets, and include product characteristics, performance criteria, physical size, finish and limitations.

.3 Shop Drawings:

.1 Shop drawings and product data accompanied by:

.1 Detailed drawings of bases, supports, and anchor bolts.

.2 Acoustical sound power data, where applicable.

.3 Points of operation on performance curves.

.4 Manufacturer to certify current model production.

.5 Certification of compliance to applicable codes.

.2 In addition to transmittal letter referred to in Section 01 33 00- Submittal Procedures: use MCAC "Shop Drawing Submittal Title Sheet". Identify section and paragraph number.

1.4 CLOSEOUT SUBMITTALS

.1 Submit in accordance with Section 01 78 00- Closeout Submittals.

.2 Operation and Maintenance Data: submit operation and maintenance data.

.1 Operation and maintenance manual approved by, and final copies deposited with, Owner's Representative before final inspection.

.2 Operation data to include:

.1 Description of systems and their controls.

.2 Operation instruction for systems and component.

.3 Description of actions to be taken in event of equipment failure.

.4 Valves schedule and flow diagram.

.5 Colour coding chart.

.3 Maintenance data to include:

.1 Servicing, maintenance, operation and trouble-shooting instructions for each item of equipment.

.2 Data to include schedules of tasks, frequency, tools required and task time.

.4 Performance data to include:

.1 Equipment manufacturer's performance datasheets with point of operation as left after commissioning is complete.

.2 Equipment performance verification test results.

.3 Special performance data as specified.

.4 Testing, adjusting and balancing reports as specified in Section 23 05 93-Testing, Adjusting and Balancing for HVAC.

.5 Approvals:

.1 Submit 1 copy of draft Operation and Maintenance Manual to Owner's Representative for approval. Submission of individual data will not be accepted unless directed by Owner's Representative.

.2 Make changes as required and re-submit as directed by Owner's Representative.

.6 Additional data:

.1 Prepare and insert into operation and maintenance manual additional data when need for it becomes apparent during specified demonstrations and instructions.

.7 Site records:

.1 Departmental Representative will provide 1 set of reproducible mechanical drawings. Provide sets of white prints as required for each phase of work. Mark changes as work progresses and as changes occur.

.2 Transfer information weekly to reproducible, revising reproducible to show work as actually installed.

.3 Use different colour waterproof ink for each service.

.4 Make available for reference purposes and inspection.

.8 As-built drawings:

.1 Prior to start of Testing, Adjusting and Balancing for HVAC, finalize production of as-built drawings.

.2 Identify each drawing in lower right hand corner in letters at least 12 mm high as follows: - "AS BUILT DRAWINGS: THIS DRAWING HAS BEEN

REVISED TO SHOW MECHANICAL SYSTEMS AS INSTALLED" (Signature of Contractor) (Date).

.3 Submit to Departmental Representative for approval and make corrections as directed.

.4 Perform testing, adjusting and balancing using as-built drawings.

.5 Submit completed reproducible as-built drawings with Operating and Maintenance Manuals.

.9 Submit copies of as-built drawings for inclusion in final TAB report.

1.5 MAINTENANCE MATERIAL SUBMITTALS

.1 Submit in accordance with Section 01 78 00- Closeout Submittals.

.2 Furnish spare parts as follows as per the individual sections of Div 22.

.3 Provide one set of special tools required to service equipment as recommended by manufacturers.

1.6 OCCUPANCY DOCUMENTATION

.1 The contractor shall submit the following documentation to the Departmental Representative a minimum of 5 working days prior to the project occupancy site walk-through or occupancy date, whichever is scheduled first. The dates will be established by the project architect, project manager or Certified Professional. It is the contractor's responsibility to provide all documentation to the Departmental Representative in a timely manner. If all documentation is not received, the Consultant may not be able to issue their associated Letter of Design Assurance in support of the building occupancy application and any associated consequences shall become the responsibility of the contractor.

.2 Anchorage and Seismic restraint systems Letter of Design Assurance and Assurance of Professional Design and Commitment for Field Review sent to Authority Having Jurisdiction and copied to Departmental Representative.

.3 Backflow Prevention Assembly Test Reports for each backflow prevention device, signed by a certified tester,

.4 Flushing, Disinfection and Chlorination certificates for potable water systems.

.5 Bacteriological test results from Environmental Health indicating approval of potable water systems.

.6 Plumbing Inspectors final certificate.

.7 Gas Inspectors Final Certificate.

.8 Maintenance Manuals for Plumbing Systems.

1.7 ANCHORAGE, SUPPORT AND SEISMIC PROTECTION

.1 Refer to Section 22 05 48.

.2 The Contractor shall retain a seismic engineer registered in the Yukon to determine the anchorage and seismic restraint requirements for this project and become the Engineer of Record for this discipline. Verification and certification to the satisfaction of the Authorities Having Jurisdiction will be required prior to Substantial Completion. Seismic Engineer shall submit a letter of assurance to the authority having jurisdiction for this work.

.3 Scope to include anchorage, support, bracing and restraint of all equipment installed under this division.

1.8 RESPONSIBILITY

.1 Promptly advise the Departmental Representative of any specified equipment and/or material which appears inadequate or unsuitable; in violation of laws, ordinances, rules, or regulation of authorities having jurisdiction; of any necessary items of work omitted from the Contract Documents; or of any discrepancies in the Specification.

.2 Check drawings of all trades to verify space and headroom limitations for work to be installed. Co-ordinate work with all trades and make changes to facilitate a satisfactory installation. Make no deviations to the design intent involving extra costs to the Owner without the Owner's written approval.

.3 Ensure that equipment does not transmit noise and/or vibration to other parts of the building as a result of poor installation practice.

.4 Pay for permits required by the Authority Having Jurisdiction. Arrange for applicable inspections.

.5 Prior to tendering, a site visit is recommended for the Contractor to familiarize himself with local and existing conditions on which the work is dependent. No additional charges will be considered for items which are not concealed.

.6 Work carried out in the existing building shall be conducted to minimize disruption to tenants.

1.9 WORKMANSHIP

.1 Workmanship shall be in accordance with well established practice and standards accepted and recognized by Departmental Representative and the Trade.

.2 The Owner shall have the right to reject any item of work that does not conform to the Contract Documents and accepted standards of performance, quietness of operation, finish, and appearance.

.3 Employ only tradesmen holding valid Trade Qualification Certificates. Tradesmen shall perform only work that their certificate permits. Certificates shall be available for inspection by the Departmental Representative.

.4 On request by the Owner, the Contractor shall demonstrate thorough knowledge of system and equipment being installed.

1.10 DRAWINGS AND SPECIFICATIONS

.1 Drawings are generally diagrammatic and are intended to indicate the scope and general arrangement of work. Do not scale the drawings.

.2 Consult the architectural drawings and details for exact locations of fixtures and equipment. Obtain this information from the Departmental Representative where definite locations are not indicated.

.3 Take field measurements where equipment and material dimensions are dependent upon building dimensions.

.4 The drawings and specifications are complimentary to each other, and what is called for in one shall be binding as if called for in both.

.5 Should any discrepancy between the drawings and specifications be present, it is the responsibility of the contractor to notify the Departmental Representative prior to the closing of the tender.

1.11 EQUIPMENT INSTALLATION

.1 Provide unions and flanges to permit equipment maintenance and disassembly and to minimize disturbance to piping and duct systems and without interfering with building structure or other equipment.

.2 Provide means of access for servicing, disassembly, and removal of equipment and components including permanently lubricated bearings.

.3 Pipe equipment drains to floor drains.

.4 Line up equipment, rectangular cleanouts and similar items parallel to or perpendicular to building walls.

.5 Flexible couplings: Install to provide for differential movement during seismic events between attachment points.

.6 Expansion joints: Install on any straight run of pipe longer than 100 feet (30m).

1.12 PROTECTION OF OPENINGS

.1 Protect equipment and systems openings from dirt, dust, and other foreign material with materials appropriate to system

1.13 ELECTRICAL

.1 Electrical work is to conform to Division 26 specifications. The following electrical work is included in Division 25.

.1 All conduit, wiring, and connections 50V and under relating to mechanical systems including installation of transformers. Refer to Division 26 for further clarification.

1.14 TESTS

.1 Give 72 hours notice of date for tests, during regular working hours.

.2 Insulate or conceal work only after testing and approval by Departmental Representative.

.3 Conduct tests in presence of Departmental Representative.

.4 Bear costs for all testing under this division and Division 26, retesting, and making good.

.5 Prior to tests, isolate all equipment or other parts which are not designed to withstand test pressures or test medium.

1.15 PAINTING

.1 Apply at least one coat of corrosion resistant primer paint and two coats or corrosion resistant paint to ferrous supports and site fabricated work.

.2 Prime and touch up marred finished paintwork to match original.

.3 Restore to new condition finishes which have been damaged too extensively to be merely primed and touched up.

1.16 DIS-SIMILAR METALS

.1 To be compatible with and to suit pressure rating of piping system.

.2 Where pipes of dissimilar metals are joined in all open, non-treated fluid systems.

1.17 EQUIPMENT SUPPORTS

.1 Equipment supports not supplied by equipment manufacturer: fabricate from structural grade steel meeting requirements of Seismic Engineer.

.2 Mount base mounted equipment on housekeeping pads provided by General Contractor where indicated on the drawings.

1.18 PIPE BEDDING

.1 All buried piping inside the building below floors and slabs shall be supported on a bed of well compacted sand. Bedding shall extend from 150mm below pipe and shall support the pipe barrel, not the joints or couplings. Before backfilling, the complete line shall be inspected and approved by the Authority Having Jurisdiction with written confirmation of grading. Record inverts at key points or at changes in direction and elevations.

Part 2 Products

2.1 ACCESS DOORS

.1 Provide for all concealed equipment or valves requiring access for servicing or repair.

.2 Design;

.1 Drywall construction; Min. 16ga thick for 400x400mm and smaller, 14ga thick for 450x450mm and larger, bonerdized steel face with exposed flange,

.2 For water resistant finished wall, tile or ceramic or wet wall construction; 14ga thick stainless steel flush with wall or ceiling with concealed hinge and water tight opening. Standard of Acceptance: Accudor

.3 Minimum Requirements; Concealed hinges, adjustable anchoring straps or lugs to suite construction.

.4 Size:

.1 200x 200mm for cleanout or valve access.

.2 300 x 300mm for hand accesss.

.3 600 x 600mm for entry access.

.4 Larger as required to suit equipment

.5 Lockable when installed in public areas, screwdriver cam lock in service areas.

.6 Access panels in fire separations shall have compatible ULC rating and listing. Doors shall be insulated and spring return hinges.

2.2 FIRESTOPPING

.1 Intumescent sealant:

.1 ULC/FM listed flexible intumescent sealant suitable as fire and smoke sealant.

.2 Standard of Acceptance: Hilti FSone

.2 Intumescent Fire Stop Collars:

.1 ULC/FM listed with galvanized metal collar, intumescent fire sealant for use with PVC and ABS schedule 40 DWV piping.

Standard of Acceptance: Hilti CP 642/643

Part 3 Execution

3.1 EXAMINATION

.1 Verification of Conditions: verify that conditions of substrate previously installed under other Sections or Contracts are acceptable.

.1 Visually inspect substrate in presence of Owner's Representative.

.2 Inform Owner's Representative of unacceptable conditions immediately upon discovery.

.3 Proceed with installation only after unacceptable conditions have been remedied and after receipt of written approval to proceed from Owner's Representative.

3.2 PAINTING REPAIRS AND RESTORATION

.1 Do painting in accordance with Section 09 91 23- Interior Painting.

.2 Prime and touch up marred finished paintwork to match original.

.3 Restore to new condition, finishes which have been damaged.

3.3 SYSTEM CLEANING

.1 Clean interior and exterior of all systems including strainers.

3.4 DEMONSTRATION

.1 Owner's Representative will use equipment and systems for test purposes prior to acceptance. Supply labour, material, and instruments required for testing.

.2 Supply tools, equipment and personnel to demonstrate and instruct operating and maintenance personnel in operating, controlling, adjusting, trouble-shooting and servicing of all systems and equipment during regular work hours, prior to acceptance.

.3 Use operation and maintenance manual, as-built drawings, and audio visual aids as part of instruction materials.

.4 Instruction duration time requirements as specified in appropriate sections.

.5 Owner's Representative may record these demonstrations on video tape for future reference.

3.5 CLEANING

.1 Progress Cleaning: clean in accordance with Section 01 74 11- Cleaning.

.1 Leave Work area clean at end of each day.

.2 Final Cleaning: upon completion remove surplus materials, rubbish, tools and equipment in accordance with Section 01 74 11- Cleaning.

3.6 PROTECTION

.1 Protect equipment and systems openings from dirt, dust, and other foreign materials with materials appropriate to system.

END OF SECTION

Part 1 General

1.1 RELATED REQUIREMENTS

.1 This Section of the specification forms part of the Contract Documents and is to be read, interpreted and coordinated with all other parts.

1.2 REFERENCE STANDARDS

.1 All referenced standards shall be to the most recent edition.

.2 ASTM International (ASTM)

.1 ASTM A126-04, Standard Specification for Gray Iron Castings for Valves, Flanges and Pipe Fittings.

.2 ASTM B62, Standard Specification for Composition Bronze or Ounce Metal Castings.

.3 American Water Works Association (AWWA)

.1 ANSI/AWWA C700, Standard for Cold Water Meters-Displacement Type, Bronze Main Case.

.2 ANSI/AWWA C701, Standard for Cold Water Meters-Turbine Type for Customer Service.

.3 ANSI/AWWA C702, Standard for Cold Water Meters-Compound Type.

.4 CSA Group (CSA)

.1 CSA-B64, Backflow Preventers and Vacuum Breakers.

.2 CSA B79, Commercial and Residential Drains and Cleanouts.

.3 CAN/CSA-B356, Water Pressure Reducing Valves for Domestic Water Supply Systems.

.5 National Research Council Canada (NRC)

.1 National Plumbing Code of Canada (NPC).

1.3 ACTION AND INFORMATIONAL SUBMITTALS

.1 Submit in accordance with Section 01 33 00- Submittal Procedures.

.2 Product Data:

.1 Submit manufacturer's instructions, printed product literature and data sheets for plumbing products and include product characteristics, performance criteria, physical size, finish and limitations.

.3 Shop Drawings:

.1 Indicate on drawings to indicate method of anchorage, dimensions, materials, accessories, number of anchors, construction and assembly details, finishes, for products in Section 2.

.4 Certificates: submit certificates signed by manufacturer certifying that materials comply with specified performance characteristics and physical properties.

.5 Instructions: submit manufacturer's installation instructions.

1.4 CLOSEOUT SUBMITTALS

.1 Submit in accordance with Section 01 78 00- Closeout Submittals.

.2 Operation and Maintenance Data: submit operation and maintenance data for plumbing specialties and accessories for incorporation into manual.

.1 Description of plumbing specialties and accessories, giving manufacturers name, type, model, year and capacity.

.2 Details of operation, servicing and maintenance.

.3 Recommended spare parts list.

1.5 DELIVERY, STORAGE AND HANDLING

.1 Deliver, store and handle materials in accordance with Section 01 61 00- Common Product Requirements, and with manufacturer's written instructions.

.2 Delivery and Acceptance Requirements: deliver materials to site in original factory packaging, labelled with manufacturer's name and address.

.3 Storage and Handling Requirements:

.1 Store materials off ground in a dry location and in accordance with manufacturer's recommendations in clean, dry, well-ventilated area.

.2 Store and protect plumbing materials from nicks, scratches, and blemishes.

.3 Replace defective or damaged materials with new.

Part 2 Products

2.1 FLOOR DRAINS

.1 Floor Drains: to CSA B79.

.2 AD-1: Area drain ; epoxy coated fabricated steel catch basin with side outlet, internal trap, membrane clamping, sediment bucket and hinged ductile iron grate.

.1 Standard of Acceptance: Watts FD-430

2.2 CLEANOUTS

.1 Cleanout Plugs: heavy cast iron male ferrule with brass screws and threaded brass or bronze plug. Sealing-caulked lead seat or neoprene gasket.

.2 Access Covers:

.1 Wall Access: face or wall type, round stainless steel cover with flush head securing screws, bevelled edge frame complete with anchoring lugs.

.2 Floor Access: epoxy coated cast box with anchor flange, rectangular, full throat, cast iron body and frame with adjustable secured nickel bronze top and:

.1 Plugs: bolted bronze with neoprene gasket.

.2 Cover for Unfinished Concrete Floors: square, nickel bronze cover, gasket, vandal-proof screws.

.3 Standard of Acceptance: Watts CO-100

2.3 NON-FREEZE WALL HYDRANTS

.1 Recessed type with integral vacuum breaker, NPS 3/4 hose outlet, removable operating key. Nickel bronze box and door, plated hydrant face, to ASME B1.20.7.

.1 Standard of Acceptance; Watts HY-725

2.4 VACUUM BREAKERS

.1 Breakers: to CSA-B64 Series, lead free, vacuum breaker, installed on service sink.

.2 Standard of Acceptance: Watts LF8

2.5 CONDENSATE NEUTRALIZER

.1 Condensate neutralizer tank suitable for use with condensing heating appliances, corrosion resistant polypropylene tank, 1 liter capacity with replaceable media with a rated capacity of 6.05L/hr, 3/4” NPT drain connections.

.1 Acceptable Products: Axiom NC-1

2.6 VENT STACK JACK FLASHING

.1 Aluminium construction, factory fabricated and insulated, deck flange and cap. Minimum 450mm high.

.2 Acceptable products: Thaler SJ

2.7 OIL INTERCEPTORS

.1 Acid resistant coated steel interior and exterior, bronze cleanout plug, double wall trap seal, flow diffusing baffle, sediment bucket, vent connections on both sides, gasketed non-skid cover.

.2 Capacity: 76L/min with 30L of oil storage.

.3 Standard of Acceptance: Zurn Z1186-500.

2.8 GRAVITY EYE WASH STATION

.1 CSA certified, wall mounted flip-down eye wash station, to ANSI/ISEA Z358.1, 15min capacity at 1.5 lpm, 38L tank, FDA approved polyethylene construction with hazard yellow activation arm, sealed and dust proof c/w mounting bracket.

.2 Standard of Acceptance: Haws 7501

Part 3 Execution

3.1 EXAMINATION

.1 Verification of Conditions: verify that conditions of substrate previously installed under other Sections or Contracts are acceptable for plumbing specialities and accessories installation in accordance with manufacturer's written instructions.

.1 Visually inspect substrate in presence of Owner's Representative.

.2 Inform Owner's Representative of unacceptable conditions immediately upon discovery.

.3 Proceed with installation only after unacceptable conditions have been remedied and after receipt of written approval to proceed from Owner's Representative.

3.2 MANUFACTURER'S INSTRUCTIONS

.1 Compliance: comply with manufacturer's written recommendations or specifications, including product technical bulletins, handling, storage and installation instructions, and data sheet.

3.3 INSTALLATION

.1 Install in accordance with National Plumbing Code of Canada (NPC) and local authority having jurisdiction bylaws .

.2 Install in accordance with manufacturer's instructions and as specified.

3.4 CLEANOUTS

.1 Install cleanouts at base of soil and waste stacks, and rainwater leaders, at locations required code, and as indicated.

.2 Bring cleanouts to wall or finished floor unless serviceable from below floor.

.3 Building drain cleanout and stack base cleanouts: line size to maximum NPS 4.

3.5 NON-FREEZE WALL HYDRANTS

.1 Install 600 mm above finished grade and as indicated.

3.6 WATER HAMMER ARRESTORS

.1 Install on branch supplies to fixtures or group of fixtures where indicated.

3.7 OIL INTERCEPTORS

.1 Install with sufficient space, as indicated, for maintenance.

.2 Provide flow restrictor, venting as well as unions and cleanouts to allow for removal and maintenance.

3.8 EYEWASH

.1 Mount eye wash were accessible and in path of travel.

.2 Fill and commission in accordance with ANSI Z-358 and manufacturers requirements.

.3 Clean all surfaces before substantial and at completion of project.

3.9 START-UP

.1 Timing: start-up only after:

.1 Pressure tests have been completed.

.2 Temperature limit stops have been set on all hot water supplies.

.3 Disinfection procedures have been completed.

.4 Certificate of static completion has been issued.

.5 Water treatment systems operational.

.2 Provide continuous supervision during start-up.

3.10 TESTING AND ADJUSTING

.1 Timing:

.1 After start-up deficiencies rectified.

.2 After certificate of completion has been issued by authority having jurisdiction.

.2 Adjustments:

.1 Verify that flow rate and pressure meet design criteria.

.2 Make adjustments while flow rate or withdrawal is (1) maximum and (2) 25% of maximum and while pressure is (1) maximum and (2) minimum.

.3 Vacuum breakers, backflow preventers, backwater valves:

.1 Test tightness, accessibility for O&M of cover and of valve.

.2 Verify visibility of discharge from open ports.

.4 Access doors:

.1 Verify size and location relative to items to be accessed.

.5 Cleanouts:

.1 Verify covers are gas-tight, secure, yet readily removable.

.6 Oil interceptors:

.1 Activate, using manufacturer's recommended procedures and materials.

.7 Hose bibbs, sediment faucets:

.1 Verify that flow and pressure meet design criteria.

.2 Check for leaks, replace compression washer if required.

3.11 PROTECTION

.1 Protect installed piping, products and components from dust, debris and/or damage during construction.

.2 Repair damage to adjacent materials caused by plumbing specialties and accessories installation.

END OF SECTION

Part 1 General

1.1 RELATED REQUIREMENTS

.1 This Section of the specification forms part of the Contract Documents and is to be read, interpreted and coordinated with all other parts.

1.2 REFERENCE STANDARDS

.1 All referenced standards shall be to the most recent edition.

.2 National Research Council Canada (NRC)

.1 National Plumbing Code of Canada (NPC).

1.3 ACTION AND INFORMATIONAL SUBMITTALS

.1 Submittals in accordance with Section 01 33 00- Submittal Procedures.

.2 Coordinate submittal requirements and provide submittals required by Section 01 47 15- Sustainable Requirements: Construction.

.3 Product Data:

.1 Submit manufacturer's printed product literature, specifications and data sheet for fixtures and equipment.

.4 Shop Drawings.

.1 Submit shop drawings to indicate:

.1 Equipment, including connections, fittings, control assemblies and ancillaries. Identify whether factory or field assembled.

.2 Wiring and schematic diagrams.

.3 Dimensions and recommended installation.

.4 Pump performance and efficiency curves.

.5 Instructions: submit manufacturer's installation instructions.

.6 Manufacturers' Field Reports: manufacturers' field reports specified.

Part 2 Products

2.1 SUMP PUMP SUBMERSIBLE

.1 Capacity: As indicated on the plans..

.2 Construction: simplex CSA approved, housing epoxy coated cast iron, self lubricating bearings, non-clog steel impeller, mechanical shaft seal.

.3 Motor: hermetically sealed, oil cooled motor, with automatic overload protection.

.4 Control: integral diaphragm type level control and simplex control box with high level alarm.

.5 Accessories: 610mm diameter x 120mm FRP basin with mounting studs, inlet and outlet hubs for inlet, discharge and venting, anti flotation ring, and pedestrian rated checker plate cover

.6 Acceptable Products: Myers

Part 3 Execution

3.1 MANUFACTURER'S INSTRUCTIONS

.1 Compliance: comply with manufacturer's written recommendations or specifications, including product technical bulletins, handling, storage and installation instructions, and data sheet.

3.2 INSTALLATION

.1 Make piping and electrical connections to pump and motor assembly and controls as indicated.

.2 Ensure pump and motor assembly do not support piping.

3.3 FIELD QUALITY CONTROL

.1 Site Tests/Inspection:

.1 Check power supply.

.2 Check starter protective devices.

.2 Start-up, check for proper and safe operation.

.3 Verify flow and pressure settings.

.4 Confirm controls are configured to suit application.

3.4 SUMP PUMPS

.1 Coordinate installation of basin with G.C. Prepare foundation as per manufacturer’s instructions.

.2 Coordinate wiring with Div. 26. Provide conduit to basin for power and alarm panel.

.3 Install pump in accordance with manufacturer’s instructions. Connect all piping through liquid and gas tight grommets supplied by basin manufacturer.

.4 Configure floats and alarms as required to achieve proper operation.

.5 Test all control circuits after installation of pumps. Correct any deficiencies with operation and controls.

3.5 REPORTS

.1 Include:

.1 Pump test and results on contractor's letter head. Include date, name and signature of testing personnel and results.

.2 Pump performance curves (family of curves) with final point of actual performance.

3.6 TRAINING

.1 In accordance with Div. 1 requirements as supplemented in Section 23 05 00.

END OF SECTION

Part 1 General

1.1 RELATED REQUIREMENTS

.1 This Section of the specification forms part of the Contract Documents and is to be read, interpreted and coordinated with all other parts.

1.2 REFERENCE STANDARDS

.1 All referenced standards shall be to the most recent edition.

.2 American Society of Mechanical Engineers International (ASME)

- .1 ANSI/ASME B16.15, Cast Cooper Alloy Threaded Fittings, Classes 125 and 250.
- .2 ANSI/ASME B16.18, Cast Copper Alloy Solder Joint Pressure Fittings.
- .3 ANSI/ASME B16.22, Wrought Copper and Copper Alloy Solder Joint Pressure Fittings.
- .4 ANSI/ASME B16.24, Cast Copper Alloy Pipe Flanges and Flanged Fittings: Class 150, 300, 400, 600, 900, 1500 and 2500.
- .5 ASME B16.26, Cast Copper Alloy Fittings for Flared Copper Tubes.
- .6 ASME B31.9, Building Services Piping.
- .7 ASME B36.19M, Stainless Steel Pipe.

.3 ASTM International (ASTM)

- .1 ASTM A182/A 182M, Standard Specification for Forged or Rolled Alloy and Stainless Steel Pipe Flanges, Forged Fittings, and Valves and Parts for High-Temperature Service.
- .2 ASTM A269, Standard Specification for Seamless and Welded Austenitic Stainless Steel Tubing for General Service.
- .3 ASTM A307, Standard Specification for Carbon Steel Bolts and Studs, 60,000 PSI Tensile Strength.
- .4 ASTM A312/A312M, Seamless, Welded, and Heavily Cold Worked Austenitic Stainless Steel Pipes.
- .5 ASTM A351/A351M, Castings, Austenitic, for Pressure Containing Parts.
- .6 ASTM A403/A403M, Wrought Austenitic Stainless Steel Piping Fittings.
- .7 ASTM A536-84, Standard Specification for Ductile Iron Castings.
- .8 ASTM B32, Standard Specification for Solder Metal.
- .9 ASTM B42, Seamless Copper Tube, Standard Sizes.
- .10 ASTM B88M, Standard Specification for Seamless Copper Water Tube (Metric).
- .11 ASTM F876, Standard Specification for Crosslinked Polyethylene (PEX) Tubing.
- .12 ASTM F877, Standard Specification for Crosslinked Polyethylene (PEX) Hot and Cold Water Distribution System.

.4 American National Standards Institute/American Water Works Association (ANSI)/(AWWA)

.1 ANSI/AWWA C111/A21.11, Rubber-Gasket Joints for Ductile-Iron Pressure Pipe and Fittings.

.2 ANSI/AWWA C151/A21.51, Ductile Iron Pipe, Centrifugally Cast, for Water.

.3 AWWA C904, Crosslinked Polyethylene (PEX) Pressure Pipe, ½ In. (12 mm) through 3 In. (76mm), for Water Service.

.5 CSA Group (CSA)

.1 CSA B137.5, Crosslinked Polyethylene (PEX) Tubing Systems for Pressure Applications.

.2 CSA B242, Groove and Shoulder Type Mechanical Pipe Couplings.

.6 Underwriters Laboratories of Canada (ULC)

.1 CAN/ULC S101, Fire Endurance Tests of Buildings Construction and Materials.

.2 CAN/ULC S102.2, Method of Test for Surface Burning Characteristics of Flooring, Floor Coverings and Miscellaneous Materials and Assemblies.

.3 CAN/ULC S115, Standard Method of Fire Tests of Firestop.

.7 Manufacturer's Standardization Society of the Valve and Fittings Industry (MSS).

.1 MSS-SP-67, Butterfly Valves.

.2 MSS-SP-70, Grey Iron Gate Valves, Flanged and Threaded Ends.

.3 MSS-SP-71, Grey Iron Swing Check Valves, Flanged and Threaded Ends.

.4 MSS-SP-80, Bronze Gate, Globe, Angle and Check Valves.

.8 National Research Council (NRC)

.1 National Plumbing Code of Canada (NPC).

1.3 ACTION AND INFORMATIONAL SUBMITTALS

.1 Provide submittals in accordance with Section 01 33 00- Submittal Procedures.

.2 Product Data

.1 Provide manufacturer's printed product literature and datasheets for insulation and adhesives, and include product characteristics, performance criteria, physical size, finish and limitations.

1.4 DELIVERY, STORAGE AND HANDLING

.1 Deliver, store and handle materials in accordance with Section 01 61 00- Common Product Requirements and with manufacturer's written instructions.

.2 Delivery and Acceptance Requirements: deliver materials to site in original factory packaging, labelled with manufacturer's name and address.

.3 Storage and Handling Requirements:

.1 Store materials in dry location off ground and in accordance with manufacturer's recommendations in clean, dry, well-ventilated area.

.2 Store and protect from nicks, scratches, and blemishes.

.3 Replace defective or damaged materials with new.

Part 2 Products

2.1 PIPING

.1 Domestic hot, cold and recirculation systems, within building.

.1 Above ground exposed or in ceiling cavities:

.1 Copper tube, hard drawn, type L: to ASTM B88M.

.2 Buried or embedded in wall assemblies:

.1 Copper tube, soft annealed, type L : to ASTM B88M, in long lengths and with no buried joints.

.2 PEX Piping to CSA B137.5.

2.2 FITTINGS

.1 Bronze pipe flanges and flanged fittings, Class 150 : to ANSI/ASME B16.24.

.2 Cast bronze threaded fittings, Class 125 and 250: to ANSI/ASME B16.15.

.3 Cast copper, solder type: to ANSI/ASME B16.18.

.4 Wrought copper and copper alloy, solder type: to ANSI/ASME B16.22.

.5 NPS 1 ½ and smaller:

.1 Solder type as recommended by manufacturer.

.2 cast copper to ANSI/ASME B16.18 with 301 stainless steel internal components and EPDM seals. Suitable for operating pressure to 1380 kPa.

.3 PEX fittings to CSA B137.5.

2.3 JOINTS

.1 Solder: 95/5 tin copper alloy .

.2 Teflon tape: for threaded joints.

.3 Dielectric connections between dissimilar metals: dielectric fitting, complete with thermoplastic liner.

.4 NPS 1 ½ and smaller: PEX fittings to CSA B137.5.

2.4 GATE VALVES

.1 NPS 2 and under, soldered:

.1 Non -rising stem: to MSS-SP-80, Class 125, 860 kPa, bronze body, screw-in bonnet, solid wedge disc.

.2 Acceptable Products: Kitz 41, Toyo 281A, Red & White

.2 NPS 2 1/2 and over, flanged:

.1 Rising stem: to MSS-SP-70, Class 125, 860 kPa, flat flange faces, cast-iron body, OS&Y, bronze trim.

.2 Acceptable Products: Kitz 72, Toyo 421A, Red & White

2.5 BALL VALVES

.1 NPS 2 and under, screwed:

.1 Class 150.

.2 Bronze body, stainless steel ball, PTFE adjustable packing, brass gland and PTFE Teflon seat, NSF Certified, steel lever handle.

.3 Standard of Acceptance: Kitz #858

.2 NPS 2 and under, soldered:

.1 To ANSI/ASME B16.18, Class 150.

.2 Bronze body, stainless steel ball, PTFE adjustable packing, brass gland and PTFE seat, steel lever handle, with NPT to copper adaptors.

.3 Standard of Acceptance: Kitz #859

2.6 VACCUM RELIEF

.1 Installed on cold water inlet hot water tanks

.1 CSA Listed, 125 psi rating

.2 Acceptable products: Watts 36A

Part 3 Execution

3.1 APPLICATION

.1 Manufacturer's Instructions: comply with manufacturer's written recommendations, including product technical bulletins, handling, storage and installation instructions, and datasheets.

3.2 INSTALLATION

.1 Install in accordance with NPC and local authority having jurisdiction bylaws.

.2 Install pipe work in accordance with Section 23 05 15- Common Installation Requirements for HVAC Pipework, supplemented as specified herein.

.3 Assemble piping using fittings manufactured to ANSI and Standard Council of Canada (SCC) standards. All component sot be lead free

.4 Install CWS piping below and away from HWS and HWC and other hot piping so as to maintain temperature of cold water as low as possible.

.5 Connect to fixtures and equipment in accordance with manufacturer's written instructions unless otherwise indicated.

.6 Buried tubing:

.1 Lay in well compacted washed sand in accordance with AWWA Class B bedding.

.2 Bend tubing without crimping or constriction. Minimize use of fittings.

.7 Valves

.1 Isolate equipment, fixtures and branches with butterfly, gate or ball valves.

.2 Balance recirculation system using lockshield globe valves. Mark settings and record on as-built drawings on completion.

3.3 PRESSURE TESTS

.1 Conform to requirements of the NPC and AHJ.

.2 Test pressure: greater of 1.5 times maximum system operating pressure or 300 kPa.

3.4 FLUSHING AND CLEANING

.1 Flush entire system for 8 h. Ensure outlets flushed for 2 hours. Let stand for 24 hours, then draw one sample off longest run. Submit to testing laboratory to verify that system is clean and free of contamination. Let system flush for additional 2 hours, then draw off another sample for testing.

3.5 PRE-START-UP INSPECTIONS

.1 Systems to be complete, prior to flushing, testing and start-up.

.2 Verify that system can be completely drained.

3.6 DISINFECTION

.1 Flush out, disinfect and rinse system to requirements of authority having jurisdiction.

.2 Coordinate with Section 33 11 16- Site Water Utility Distribution Piping and Section 33 11 16.01- Incoming Site Water Utility Distribution Piping.

.3 Upon completion, provide approved laboratory test reports on water quality for Owner's Representative review.

3.7 START-UP

.1 Timing: start up after:

.1 Pressure tests have been completed.

.2 Disinfection procedures have been completed.

.3 Certificate of static completion has been issued.

.4 Water treatment systems operational.

.2 Provide continuous supervision during start-up.

.3 Start-up procedures:

.1 Establish circulation and ensure that air is eliminated.

.2 Check pressurization to ensure proper operation and to prevent water hammer, flashing and/or cavitation.

.3 Bring HWS storage tank up to design temperature slowly.

.4 Monitor piping HWS and HWC piping systems for freedom of movement, pipe expansion as designed.

.5 Check control, limit, safety devices for normal and safe operation.

.4 Rectify start-up deficiencies.

3.8 PERFORMANCE VERIFICATION

.1 Scheduling:

.1 Verify system performance after pressure and leakage tests and disinfection are completed, and Certificate of Completion has been issued by authority having jurisdiction.

.2 Procedures:

.1 Verify that flow rate and pressure meet Design Criteria.

.2 TAB HWC in accordance with Section 23 05 93- Testing, Adjusting and Balancing for HVAC.

.3 Adjust pressure regulating valves while withdrawal is maximum and inlet pressure is minimum.

.4 Sterilize HWS and HWC systems for Legionella control.

.5 Verify performance of temperature controls.

.6 Verify compliance with safety and health requirements.

.7 Check for proper operation of water hammer arrestors. Run one outlet for 10 seconds, then shut of water immediately. If water hammer occurs, replace water hammer arrestor or re-charge air chambers. Repeat for outlets and flush valves.

.8 Confirm water quality consistent with supply standards, and ensure no residuals remain as result of flushing or cleaning.

3.9 OPERATION REQUIREMENTS

.1 Co-ordinate operation and maintenance requirements including, cleaning and maintenance of specified materials and products with Section 23 05 15- Common Installation Requirements for HVAC Pipework.

3.10 CLEANING

.1 Clean in accordance with Section 01 74 00- Cleaning.

END OF SECTION

Part 1 General

1.1 RELATED REQUIREMENTS

.1 This Section of the specification forms part of the Contract Documents and is to be read, interpreted and coordinated with all other parts

1.2 REFERENCE STANDARDS

.1 All referenced standards shall be to the most recent edition.

.2 ASTM International (ASTM)

.1 ASTM D2235, Standard Specification for Solvent Cement for Acrylonitrile-Butadiene-Styrene (ABS) Plastic Pipe and Fittings.

.2 ASTM D2564, Standard Specification for Solvent Cements for Poly (Vinyl-Chloride) (PVC) Plastic Piping Systems.

.3 CSA Group (CSA)

.1 CAN/CSA-Series B1800, Thermoplastic Nonpressure Pipe Compendium - B1800 Series.

.2 CAN/CSA-B181.2, PVC Drain, Waste, and Vent Pipe and Pipe Fittings.

.3 CAN/ULC-S102.2, Standard Method Of Test For Surface Burning Characteristics Of Flooring, Floor Coverings, And Miscellaneous Materials And Assemblies

.4 National Research Council Canada (NRC)

.1 National Plumbing Code of Canada (NPC).

1.3 ACTION AND INFORMATIONAL SUBMITTALS

.1 Provide submittals in accordance with Section 01 33 00- Submittal Procedures.

.2 Product Data:

.1 Provide manufacturer's printed product literature and datasheets for piping and adhesives, and include product characteristics, performance criteria, physical size, finish and limitations.

1.4 DELIVERY, STORAGE AND HANDLING

.1 Deliver, store and handle in accordance with Section 01 61 00- Common Product Requirements .

.2 Deliver materials to site in original factory packaging, labelled with manufacturer's name, address.

.3 Store at temperatures and conditions recommended by manufacturer.

Part 2 Products

2.1 PIPING AND FITTINGS

.1 For buried DWV piping to:

.1 CAN/CSA B1800.

.2 DWV PVC to CSA-B181.2

.3 Acceptable Products: IPEX System 15

2.2 JOINTS

.1 Solvent weld for PVC: to ASTM D2564.

.2 Solvent weld for ABS: to ASTM D2235.

Part 3 Execution

3.1 APPLICATION

.1 Manufacturer's Instructions: comply with manufacturer's written recommendations, including product technical bulletins, handling, storage and installation instructions, and datasheets.

3.2 INSTALLATION

.1 In accordance with Section 23 05 15- Common installation requirements for HVAC pipework .

.2 Install in accordance with National Plumbing Code and local authority having jurisdiction bylaws.

3.3 TESTING

.1 Pressure test buried systems before backfilling.

.2 Hydraulically test to verify grades and freedom from obstructions.

3.4 PERFORMANCE VERIFICATION

.1 Cleanouts:

.1 Ensure accessible and that access doors are correctly located.

.2 Open, lubricate and re-seal.

.3 Verify cleanout rods can probe as far as the next cleanout, at least.

.2 Test to ensure traps are fully and permanently primed.

.3 Ensure fixtures are properly anchored, connected to system and effectively vented.

.4 Affix applicable label (storm, sanitary, vent, pump discharge) c/w directional arrows every floor or 4.5 m (whichever is less).

END OF SECTION

Part 1 General

1.1 RELATED REQUIREMENTS

.1 This Section of the specification forms part of the Contract Documents and is to be read, interpreted and coordinated with all other parts.

1.2 REFERENCE STANDARDS

.1 All referenced standards shall be to the most recent edition.

.2 American National Standards Institute/Canadian Standards Association (ANSI/CSA)

- .1 ANSI Z21.10.1 /CSA 4.1, Gas Water Heaters - Volume I, Storage Water Heaters With Input Ratings of 75,000 Btu Per Hour or Less.
- .2 ANSI Z21.10.1A/CSA 4.1A, Addenda 1 to ANSI Z21.10.1-2004/CSA 4.1-2004, Gas Water Heaters Volume I, Storage Water Heaters With Input Ratings of 75,000 Btu Per Hour or Less.
- .3 ANSI Z21.10.1b /CSA 4.1b, Addenda 2 to ANSI Z21.10.1-2004/CSA 4.1-2004, Gas Water Heaters - Volume I, Storage Water Heaters With Input Ratings of 75,000 Btu Per Hour or Less.
- .4 ANSI Z21.10.3A /CSA 4.3, Gas Water Heaters - Volume III - Storage Water Heaters, with Input Ratings Above 75,000 Btu Per Hour, Circulating and Instantaneous.

.3 CSA Group (CSA)

- .1 CSA B51-03 , Boiler, Pressure Vessel, and Pressure Piping Code.
- .2 CAN/CSA-B139, Installation Code for Oil Burning Equipment.
- .3 CAN/CSA-B140.0, Oil Burning Equipment: General Requirements.
- .4 CAN/CSA-B149.1, Natural Gas and Propane Installation Code.
- .5 CAN/CSA-B149.2, Propane Storage and Handling Code.
- .6 CSA B140.12-, Oil-Burning Equipment: Service Water Heaters for Domestic Hot Water, Space Heating, and Swimming Pools.
- .7 CAN/CSA C22.2 No.110, Construction and Test of Electric Storage Tank Water Heaters.
- .8 CAN/CSA-C191, Performance of Electric Storage Tank Water Heaters for Household Service.
- .9 CAN/CSA-C309, Performance Requirements for Glass-Lined Storage Tanks for Household Hot Water Service.

.4 National Research Council Canada (NRC)

- .1 National Plumbing Code of Canada (NPC).

1.3 ACTION AND INFORMATIONAL SUBMITTALS

.1 Provide submittals in accordance with Section 01 33 00- Submittal Procedures.

.2 Product Data:

.1 Provide manufacturer's printed product literature and datasheets for domestic water heater, and include product characteristics, performance criteria, physical size, finish and limitations.

1.4 DELIVERY, STORAGE AND HANDLING

.1 Deliver, store and handle materials in accordance with Section 01 61 00- Common Product Requirements and with manufacturer's written instructions.

.2 Delivery and Acceptance Requirements: deliver materials to site in original factory packaging, labelled with manufacturer's name and address.

.3 Storage and Handling Requirements:

.1 Store materials in dry location off ground and in accordance with manufacturer's recommendations in clean, dry, well-ventilated area.

.2 Store and protect from nicks, scratches, and blemishes.

.3 Replace defective or damaged materials with new.

1.5 WARRANTY

.1 For the Work of this Section, 12 months warranty period prescribed in subsection GC 32.1 of General Conditions "C" is extended to number of years specified for each product.

.2 Contractor hereby warrants domestic water heaters in accordance with CCDC2, but for number of years specified for each product.

Part 2 Products

2.1 ELECTRIC WATER HEATER

.1 To CAN/CSA C22.2 No.110, CAN/CSA-C191 and CAN/CSA-C309 for glass-lined storage tanks.

.2 Tank: Low lead compliant, seamless construction, glass lined, polyurethane insulation, recessed drain valve, T&P relief valve, 5 year warranty certificate.

.3 120V/1ph/60 Hz

.4 Capacity: As indicated on the drawings.

2.2 TRIM AND INSTRUMENTATION

.1 Drain valve: NPS 1 with hose end.

.2 ASME rated temperature and pressure relief valve sized for full capacity of heater , having discharge terminating over floor drain and visible to operators.

2.3 ANCHOR BOLTS AND TEMPLATES

.1 Supply anchor bolts and templates for installation in concrete support pad in accordance with structural details .

.2 Size anchor bolts to withstand seismic zone acceleration and velocity forces in accordance with seismic engineer.

Part 3 Execution

3.1 APPLICATION

.1 Manufacturer's Instructions: comply with manufacturer's written recommendations, including product technical bulletins, handling, storage and installation instructions, and datasheets.

3.2 INSTALLATION

.1 Install in accordance with manufacturer's recommendations and authority having jurisdiction .

.2 Provide structural steel as needed . for restraint of tank and piping.

.3 Where installation results in a closed loop system, provide for means of expansion and/or relief.

.4 Provide Temperature and Pressure relief valves on tank. Install such that probe properly senses the temperature. Pipe relief to drain with full port outlet and position discharge to prevent splash-over.

.5 Provide vacuum relief at cold connection, install above top of water tank.

.6 Provide isolation at all tank and heater connections

.7 Provide corrosion resistant and water tight drain pan under any hot water storage tanks. Pipe outlet to drain.

END OF SECTION

Part 1 General

1.1 RELATED REQUIREMENTS

.1 This Section of the specification forms part of the Contract Documents and is to be read, interpreted and coordinated with all other parts.

1.2 REFERENCE STANDARDS

.1 All referenced standards shall be to the most recent edition.

.2 CSA Group (CSA)

.1 CAN/CSA-B45 Series-02, Plumbing Fixtures.

.2 CAN/CSA-B125.3, Plumbing Fittings.

.3 CAN/CSA-B651, Accessible Design for the Built Environment.

.3 National Research Council Canada (NRC)

.1 National Building Code of Canada (NBC).

1.3 ACTION AND INFORMATIONAL SUBMITTALS

.1 Provide submittals in accordance with Section 01 33 00- Submittal Procedures.

.2 Product Data:

.1 Provide manufacturer's printed product literature and datasheets for fixtures, and include product characteristics, performance criteria, physical size, finish and limitations.

1.4 CLOSEOUT SUBMITTALS

.1 Provide maintenance data in accordance with Section 01 78 00- Closeout Submittals.

.2 Include:

.1 Description of fixtures and trim, giving manufacturer's name, type, model, year, capacity.

.2 Details of operation, servicing, maintenance.

.3 List of recommended spare parts.

1.5 DELIVERY, STORAGE AND HANDLING

.1 Deliver, store and handle materials in accordance with Section 01 61 00- Common Product Requirements and with manufacturer's written instructions.

.2 Delivery and Acceptance Requirements: deliver materials to site in original factory packaging, labelled with manufacturer's name and address.

.3 Storage and Handling Requirements:

.1 Store materials in dry location off ground and in accordance with manufacturer's recommendations in clean, dry, well-ventilated area.

.2 Store and protect from nicks, scratches, and blemishes.

.3 Replace defective or damaged materials with new.

Part 2 Products

2.1 GENERAL REQUIREMENTS

.1 Fixtures: manufacture in accordance with CAN/CSA-B45 series.

.2 Trim, fittings: manufacture in accordance with CAN/CSA-B125.

.3 Exposed plumbing brass to be chrome plated.

.4 Number, locations: architectural drawings to govern.

.5 Fixtures to be product of one manufacturer.

.6 Trim to be product of one manufacturer.

2.2 SS-1 SERVICE SINKS:

.1 Sink: 16 ga 304 stainless steel single compartment service sink with 610mm drain board and 200 mm high back splash. Size: 610 x 610 x 356 mm.

.2 Supply fitting: with vacuum breaker, indexed cross handles, heavy cast brass spout with pail hook, aerator, brace to wall, integral stop valves.

.3 Waste fitting: chrome plated outlet strainer, enamelled cast iron trap standard with brass cleanout and adjustable floor flange.

.4 Rim guard: stainless steel, continuous on three sides .

.5 Standard of Acceptance; Franke RSL2424 with Delta 28T9

2.3 FIXTURE PIPING

.1 Hot and cold water supplies to each fixture:

.1 Chrome plated flexible supply pipes each with handwheel stop, reducers, escutcheon.

.2 Waste:

.1 Brass P trap with clean out on each fixture not having integral trap.

.2 Chrome plated in all exposed places.

Part 3 Execution

3.1 APPLICATION

.1 Manufacturer's Instructions: comply with manufacturer's written recommendations, including product technical bulletins, handling, storage and installation instructions, and datasheets.

3.2 INSTALLATION

.1 Install fixtures, trim and accessories in accordance with manufacturer’s instruction and the National Plumbing Code of Canada.

3.3 ADJUSTING

.1 Conform to water conservation requirements specified this section.

.2 Adjustments:

.1 Adjust water flow rate to design flow rates.

.2 Adjust pressure to fixtures to ensure no splashing at maximum pressures.

.3 Checks:

.1 Aerators: operation, cleanliness.

.2 Vacuum breakers, backflow preventers: operation under all conditions.

3.4 CLEANING

.1 Clean in accordance with Section 01 74 11- Cleaning.

.1 Remove surplus materials, excess materials, rubbish, tools and equipment.

END OF SECTION

Part 1 General

1.1 GENERAL REQUIREMENTS

.1 This section covers items common to all sections of Division 21 and 23 and is intended to supplement the requirements of Division 1

.2 When reference is made to Codes and Standards in these specifications, the most recent edition of the Code or Standard is assumed

1.2 SCOPE OF WORK

.1 Provide a complete, fully tested and operational mechanical system to meet the requirements described herein, in complete accordance with the applicable codes and ordinances.

.2 The word “Provide” shall mean “Supply and Install” the products and services specified. “As Indicated” means that the item(s) specified are shown on the drawings.

.3 Provide materials and equipment in conformance with the specified design, performance and quality. Equipment shall have published certifications and shall have replacement parts readily available.

.4 Follow manufacturers recommended installation details and procedures for equipment supplemented by the requirements of the contractor documents.

.5 The most stringent requirements of this and other mechanical sections shall govern. Should inconsistencies exist, the more stringent requirement shall apply.

.6 Provide seismic restraint for all equipment as specified.

.7 Connect to equipment specified in other Sections and to equipment supplied and installed by other contractors or by Owner.

1.3 MATERIALS

.1 Standard of Acceptance means that item named and specified by manufacturer and/or catalogue number forms part of specification and sets standard regarding performance, quality of material and workmanship and when used in conjunction with a referenced standard, shall be deemed to supplement the standard.

.2 Equipment and material shall be installed and tested in accordance with the detailed recommendations of the manufacturer. Where there is a discrepancy between the drawings and/or the specifications and the manufacturer's written installation instructions, the most stringent shall be followed.

.3 All materials shall be CSA certified.

1.4 SUBSTITUTIONS

.1 No substitutions shall be permitted without prior written approval of Owner's Representative.

.2 Proposals for substitution may only be submitted up to 7 working days prior to tender closing. Proposals after award of contract must include statements of respective costs of items originally specified and the proposed substitution.

.3 Proposals after award of contract will be considered by Owner's Representative if:

.1 materials selected by tenderer from those specified are not available;

.2 delivery date of materials selected from those specified would unduly delay completion of contract; or

.3 alternative material to those specified, which are brought to the attention of and considered by Owner's Representative as equivalent to the material specified and will result in a credit to the Contract amount.

.4 Should proposed substitution be accepted, either in part or in whole, assume full responsibility and costs when substitution affects other work on project. Pay for design or drawing changes required as result of substitution.

.5 Amounts of all credits arising from approval of substitutions will be determined by Owner's Representative and Contract Price will be reduced accordingly.

1.5 INTENT

.1 Work shall be in accordance with the specifications and their complete with all necessary components, including those not normally shown or called for, and ready for operation before acceptance.

1.6 RESPONSIBILITY

.1 Promptly advise the Owner of any specified equipment and/or material which appears inadequate or unsuitable; in violation of laws, ordinances, rules, or regulation of authorities having jurisdiction; of any necessary items of work omitted from the Contract Documents; or of any discrepancies in the Specification.

.2 Check drawings of all trades to verify space and headroom limitations for work to be installed. Co-ordinate work with all trades and make changes to facilitate a satisfactory installation. Make no deviations to the design intent involving extra costs to the Owner without the Owner's written approval.

.3 Ensure that equipment does not transmit noise and/or vibration to other parts of the building as a result of poor installation practice.

.4 During freezing weather, protect all materials in such a manner that no harm can be done to installations already in place. Schedule work as required.

.5 Pay for permits required by the Authority Having Jurisdiction. Arrange for applicable inspections.

.6 Prior to tendering, a site visit is recommended for the Contractor to familiarize himself with local and existing conditions on which the work is dependent. No additional charges will be considered for items which are not concealed.

1.7 WORKMANSHIP

.1 Workmanship shall be in accordance with well established practice and standards accepted and recognized by Departmental Representative and the Trade.

.2 The Owner shall have the right to reject any item of work that does not conform to the Contract Documents and accepted standards of performance, quietness of operation, finish, and appearance.

.3 Employ only tradesmen holding valid Trade Qualification Certificates. Tradesmen shall perform only work that their certificate permits. Certificates shall be available for inspection by the Departmental Representative.

.4 On request by the Owner, the Contractor shall demonstrate thorough knowledge of system and equipment being installed.

1.8 ANCHORAGE, SUPPORT AND SEISMIC PROTECTION

.1 The Contractor shall retain a seismic engineer registered in the Yukon to determine the anchorage, support and seismic restraint requirements for this project and become the Engineer of Record for this discipline. Verification and certification to the satisfaction of the Authorities Having Jurisdiction will be required prior to Substantial Completion. Seismic Engineer shall submit a letter of assurance to the authority having jurisdiction for this work.

.2 Scope to include anchorage, support, bracing and restraint of all equipment installed under this division.

1.9 SCHEDULING

.1 Coordinate with Division 1 Construction Schedule.

.2 Incorporate into the Construction Schedule, a complete and realistic schedule, integrated with and recognizing the reliance on, other trades. Take into account lead times for delivery, review, installation, commissioning and start-up.

1.10 DRAWINGS AND SPECIFICATIONS

.1 Drawings are generally diagrammatic and are intended to indicate the scope and general arrangement of work. Do not scale the drawings.

.2 Consult the architectural drawings and details for exact locations of fixtures and equipment. Obtain this information from the Departmental Representative where definite locations are not indicated.

.3 Take field measurements where equipment and material dimensions are dependent upon building dimensions.

.4 The drawings and specifications are complimentary to each other, and what is called for in one shall be binding as if called for in both.

.5 Should any discrepancy between the drawings and specifications be present, it is the responsibility of the contractor to notify the Departmental Representative prior to the

closing of the tender. If not done, it will be assumed that the contractor has allowed for the most expensive option.

1.11 EQUIPMENT INSTALLATION

.1 Provide unions and flanges to permit equipment maintenance and disassembly and to minimize disturbance to piping and duct systems and without interfering with building structure or other equipment.

.2 Provide means of access for servicing, disassembly, and removal of equipment and components including permanently lubricated bearings.

.3 Pipe equipment drains to floor drains.

.4 Line up equipment, rectangular cleanouts and similar items parallel to or perpendicular to building walls.

.5 Flexible couplings: Install to provide for differential movement during seismic events between attachment points.

.6 Expansion joints: Install on any straight run of heating pipe longer than 100 feet (30m).

1.12 PROTECTION OF OPENINGS

.1 Protect equipment and systems openings from dirt, dust, and other foreign material with materials appropriate to system

1.13 ELECTRICAL

.1 Electrical work is to conform to Division 26 specifications. The following electrical work is included in Division 25.

.1 All conduit, wiring, and connections 50V and under relating to mechanical systems including installation of transformers. Refer to Division 26 for further clarification.

1.14 TESTS

.1 Give 72 hours notice of date for tests, during regular working hours.

.2 Insulate or conceal work only after testing and approval by Departmental Representative.

.3 Conduct tests in presence of Departmental Representative.

.4 Bear costs, including heating cost, for all testing under this division and Division 26, retesting, and making good.

.5 Prior to tests, isolate all equipment or other parts which are not designed to withstand test pressures or test medium.

1.15 DEMONSTRATION AND OPERATING & MAINTENANCE INSTRUCTIONS

.1 Supply tools, equipment, and personnel to demonstrate and instruct operating and maintenance personnel in operating, controlling, adjusting, trouble-shooting, and servicing of all systems and equipment during regular work hours.

.2 Conduct to the requirements of Division 1.

.3 Use Operation and Maintenance Manual and record drawings as part of instruction materials.

.4 Operating personnel shall be contacted at the beginning of the project and encouraged to come on site at least once a week for the duration of the project. During these periods, they shall be given full explanation of the various systems as the project progresses.

.5 Two weeks prior to substantial inspection, the mechanical contractor, along with the sub-trades, are expected to provide two half-day training sessions for the building owners and staff. The contractors are expected to be available during the warranty period to answer questions and troubleshoot problems.

.6 Maintain log of all site visits by operating personnel. Operating personnel to login/out and be witnessed by Contractor. Provide log as requested.

1.16 FIRESTOPPING

.1 General: Firestopping to be completed in accordance with Division 7 and schedule below with listed intumescent sealant to manufacturer's and cUL listings for rated assembly penetration. Provide manufacturer's cUL shop drawing details for every different rated assembly penetration. Jobsite conditions of each through penetration firestop system must meet ALL details of the cUL-Classified System selected. If jobsite conditions do not match any cUL-classified systems in the schedules below, contact manufacturer for alternative systems. Coordinate work with other trades to assure that penetration opening sizes are appropriate for penetrant locations.

.2 All piping/duct penetrations through 45 minute rated assemblies to be cold smoke sealed/fire sealed with listed intumescent sealant or approved cold smoke sealed at fire penetrations to sealant cUL listing.

.3 Intumescent sealant:

.1 ULC/FM listed flexible intumescent sealant suitable as fire and smoke sealant.

.2 Standard of Acceptance: Hilti FSone

.4 Intumescent Fire Stop Collars:

.1 ULC/FM listed with galvanized metal collar, intumescent fire sealant for use with PVC and ABS schedule 40 DWV piping.

.2 Standard of Acceptance: Hilti CP 642/643.

1.17 PAINTING

.1 Apply at least one coat of corrosion resistant primer paint to ferrous supports and site fabricated work.

.2 Prime and touch up marred finished paintwork to match original.

.3 Restore to new condition finishes which have been damaged too extensively to be merely primed and touched up.

1.18 EQUIPMENT SUPPORTS

.1 Equipment supports not supplied by equipment manufacturer: fabricate from structural grade steel meeting requirements of Seismic Engineer.

.2 Mount base mounted equipment on housekeeping pads provided by General Contractor where indicated on the drawings.

1.19 FIELD REVIEWS

.1 Provide for mechanical job foreman and representatives of all applicable mechanical sub-trades to be on site and available during periodic field reviews by Departmental Representative.

.2 Provide materials to Departmental Representative as required to assist with field reviews, including but not limited to, drawings, specifications, scales, tape measures, ladders, lights, etc..

.3 Notify Departmental Representative in writing prior to all boarding or wall covering of the mechanical rough-in.

.4 Notification is to be at least forty-eight (48) hours prior to actual site visit time.

.5 The Mechanical Contractor is to ensure that all components of the installation are accessible or furnish accessibility as required by the Departmental Representative or Commissioning Agent.

.6 Take digital photographs before concealing any mechanical equipment, either underground or within walls, and submit on CD or via email as part of record documents.

1.20 START-UP

.1 The Mechanical Contractor is responsible for coordinating with TAB agent and shall ensure the equipment and systems are prepared, cleaned, adjusted, with start-up completed, and verified in accordance with the TAB specification section and meet requirements thereof prior to commencement by balancer. Schedule TAB work following the completion of the following items:

.2 Installation of ceilings, doors, windows, and other construction affecting TAB.

.3 Application of sealing, caulking, and weather-stripping.

.4 All provisions of TAB are installed and operational.

.5 Start-up, verification for proper, safe, and normal operation of mechanical and associated electrical and control systems affecting TAB including, but not limited to, the following:

.1 Proper thermal overload protection in place for electrical equipment.

.2 Filters in place and in clean condition.

.3 Duct systems clean of debris.

.4 Air shafts and ceiling plenums are airtight to within specified tolerances.

.5 Correct fan rotation.

.6 Fire and volume dampers in place and open.

.7 Coil fins cleaned and combed.

.8 Access doors closed and duct end caps in place.

.9 All outlets installed and connected.

.10 Isolation valves are open.

.11 Control valves are connected, powered and operating,

.6 Resolve issues noted by balancer for completion of TAB work.

.7 Complete start-up work as described in TAB procedures and as described in the individual sections of Div. 21, 22, 23 and 25. Both Mechanical Contractor and Controls Sub-contractor are responsible for being present during commissioning.

.8 Perform operation test of all fire dampers, witnessed by TAB contractor. Record test and included in TAB report

.9 Provide start-up reports for each piece of equipment and system as required by manufacturer and the requirements of this section.

.10 Commissioning and TAB completion required prior to issue of certificate of Substantial Performance.

1.21 ACTION AND INFORMATIONAL SUBMITTALS

.1 Submit in accordance with Section 01 33 00- Submittal Procedures.

.2 Product Data:

.1 Submit manufacturer's instructions, printed product literature and data sheets as indicated in the individual Sections of Div. 21, 22, 23 and 25.

.3 Shop Drawings:

.1 Indicate on drawings:

.1 Mounting arrangements.

.2 Operating and maintenance clearances.

.2 Shop drawings and product data accompanied by:

.1 Detailed drawings of bases, supports, and anchor bolts.

.2 Acoustical sound power data, where applicable.

.3 Points of operation on performance curves.

.4 Manufacturer to certify current model production.

.5 Certification of compliance to applicable codes.

.3 In addition to transmittal letter referred to in Section 01 33 00- Submittal Procedures : use MCAC "Shop Drawing Submittal Title Sheet". Identify section and paragraph number.

1.22 CLOSE-OUT REQUIREMENTS

.1 The project close-out requirements are specifically listed in each section of the specification. The following is a summary of those requirements. Refer to detailed sections for further requirements. All life safety systems must be operational, tested with verification reports submitted prior to substantial completion.

.1 General:

.1 Identification Schedules

.2 Training and Demonstration sighed off by Owner

.3 List of incomplete or deficient work prepared and signed by each sub-trade

.4 Letter or Guarantee and Warranty

.5 Operation and Maintenance Manuals

.2 Heating:

.1 Gas fired appliance, line and piping certificates.

.2 Pressure test reports

.3 As-built drawings

.4 Flushing and cleaning report

.5 Gas fired appliance start-up and commissioning reports

.6 Testing, Adjusting and Balancing Report

.7 Manufacturers start-up reports

.3 HVAC

.1 As-built drawings

.2 Testing, Adjusting and Balancing Report

1.23 SUBSTANTIAL PERFORMANCE REQUIREMENTS

.1 Before Departmental Representative is requested to make an inspection for substantial performance of the work;

.1 Commission all systems and prove out all components, interlocks and safety devices.

.2 Submit a letter certifying that all work, including calibration, testing, adjusting and balancing of systems, is complete, operational, clean and all required submissions have been completed.

.3 A complete list of incomplete or deficient items shall be provided. If, in the opinion of the Departmental Representative, this list indicates that the project is excessively incomplete, substantial will be delayed until more progress is made.

.2 The work will not be considered to be ready for substantial completion until the following requirements have been met;

.1 All reported deficiencies have been corrected.

.2 Testing and balancing have been completed and report submitted.

.3 Operating and Maintenance Manual have been completed and submitted.

.4 "As-built" drawings have been completed and submitted.

.5 System Start-up has been completed and verified to the satisfaction of the Departmental Representative.

.6 All demonstrations to the owner have been completed.

.3 Letter of Assurance will not be issued until the following requirements have been completed;

.1 Project is considered substantially completed as indicated above.

.2 Gas Inspection and Final

.3 Plumbing Inspection Final

.4 Records of all tests have been submitted

.5 Testing, Adjusting and Balancing Report

.6 Letter of Assurance for seismic restraint, anchorage and support issued to AHJ

.7 Life safety systems have been verified in accordance with the relevant sections of this specification.

.8 Bacteriological Test Report

.9 Chlorination Report

1.24 OPERATION AND MAINTENANCE MANUALS

.1 Submit in accordance with Section 01 78 00- Closeout Submittals .

.2 Shall be the responsibility of the Mechanical Contractor.

.3 Provide an organized compilation of operating and maintenance data including detailed technical information, documents, and records describing products as specified below, and in individual sections of this division and Division 1.

.4 Operation and maintenance manual to be approved by, and final copies deposited with, Departmental Representative before final inspection.

.5 In addition to number of required sets specified in Division 1 for turn over to the Owner, provide 1 additional complete and accurate PDF electronic copy on CD to the Departmental Representative.

.6 In addition to specific requirements of individual Division 21, 22, 23 & 25 Sections, include:

.1 Title page listing submittal date, project title, name and address of Contractor and all Sub-contractors.

.2 Table of contents.

.3 Warranties and guaranties.

.4 Copies of approvals and certificates.

.5 List of equipment including suppliers, location, designation, and nameplate data.

.6 Colour coding chart for identification.

.7 Valve Tag Schedule

.8 Copies of all final “reviewed” shop drawings

.9 Copies of all tests and certificates.

.10 Building potable water system disinfection approvals from Environmental Health.

.11 Reduced photocopy of record drawings at 279 mm x 432 mm size.

.12 Completed controls as-built documentation,

.13 Photographic record CD.

.7 Operation data to include:

.1 Control schematics for each system including environmental controls.

.2 Description of each system and its controls.

.3 Operation instruction for each system and each component.

.4 Description of operation of each system at various loads together with reset schedules and seasonal variances.

.5 Description of actions to be taken in event of equipment failure.

.8 Maintenance data shall include:

.1 Servicing, maintenance, operation and trouble-shooting instructions for each item of equipment tabulated into a single summarizing document.

.2 Maintenance Schedules shall detail preventative maintenance procedures and their required frequency.

.3 Maintenance Schedules of tasks shall be subdivided into daily, weekly, bi-monthly, monthly, bi-annual, annual, 5 year, 10 year, etc. tasks as required.

.9 Performance data to include:

.1 Equipment manufacturer's performance data sheets with point of operation as left after TAB is complete.

.2 Equipment performance test results.

.3 Testing, adjusting and balancing reports as specified in Section 25 05 93-Testing, Adjusting, and Balancing.

.4 Final start-up report

.10 Equipment data to include:

.1 Copies of reviewed shop drawings bearing Contractor's stamp of approval and Departmental Representative's review stamp. Photocopies are acceptable. Include details of suppliers.

.11 Approvals:

.1 Submit 1 copy of draft Operation and Maintenance Manual to Departmental Representative for approval.

.2 Make changes as required and re-submit as directed by Departmental Representative.

.3 After receiving approval of the draft copy, make any corrections as may be required and then furnish three final copies to the Departmental Representative at least ten working days prior to the substantial performance inspection date.

.12 Additional data:

.1 Prepare and insert into operation and maintenance manual when need for same becomes apparent during demonstrations and instructions specified above.

.13 Site records:

.1 Departmental Representative will provide 1 set of reproducible mechanical drawings. Provide sets of white prints as required for each phase of work. Mark changes as work progresses and as changes occur. Include changes to existing mechanical systems, control systems and low voltage control wiring .

.2 Transfer information weekly to reproducibles, revising reproducibles to show work as actually installed.

.3 Use different colour waterproof ink for each service.

.4 Make available for reference purposes and inspection.

.14 As-built drawings:

.1 Prior to start of Testing, Adjusting and Balancing for HVAC, finalize production of as-built drawings.

.2 Identify each drawing in lower right hand corner in letters at least 12 mm high as follows: - "AS BUILT DRAWINGS: THIS DRAWING HAS BEEN REVISED TO SHOW MECHANICAL SYSTEMS AS INSTALLED" (Signature of Contractor) (Date).

.3 Submit to Departmental Representative for approval and make corrections as directed.

.4 Perform testing, adjusting and balancing for HVAC using as-built drawings.

.5 Submit completed reproducible as-built drawings with Operating and Maintenance Manuals.

.6 Submit copies of as-built drawings for inclusion in final TAB report.

.15 Digital Copies;

.1 Digital Manuals shall be supplied on three separate CD-ROM or USB Thumb drives in digital format. Information shall be organized into sections in a user friendly format that easily searchable for specific information. An indexing system shall be included that remains on an expandable portion of the screen

and allows end user to scroll through the manual information that appears on the main portion of the screen . The digital copy shall be arranged in a manner identical to the hard copy version. The specific requirements are listed below;

.1 Utilize Adobe Acrobat 5.0 or later in PDF format.

.2 Indication manual volume where applicable.

.3 Final copies to be transferred to digital media with custom label.

.4 Label shall include project name, location, date, and information required on hard copy cover.

.5 The digital manual shall be enhanced with the following features, bookmarks, internet links, internal document links and serchable.

.16 Binders:

.1 O&M manuals to be assembled in 210x275mm capacity, expanding spine catalogue binders complete with plated piano hinges, bound in heavy fabric, hot stamped lettering on front and side. Provide sufficient volume to allow each binder to hold system data while in full closed position (not expanded). Provide artwork and fabric colour to Departmental Representative for approval prior to binder construction.

.17 Binder cover identification will include:

.1 MECHANICAL OPERATION and MAINTENANCE MANUAL

.2 BUILDING:

.3 DATE:

.4 WHITEHORSE, YUKON

.5 OWNER:

.6 MECHANICAL ENGINEER: NORTHERN CLIMATE ENGINEERING LTD.

.7 MECHANICAL CONTRACTOR:

Part 2 Products

2.1 NOT USED

Part 3 Execution

3.1 EXAMINATION

.1 Verification of Conditions: verify that conditions of substrate previously installed under other Sections or Contracts are acceptable for use.

.1 Visually inspect substrate in presence of Departmental Representative .

.2 Inform Departmental Representative of unacceptable conditions immediately upon discovery.

.3 Proceed with installation only after unacceptable conditions have been remedied Departmental Representative.

3.2 PAINTING REPAIRS AND RESTORATION

.1 Do painting in accordance with Section 09 91 23- Interior Painting.

.2 Prime and touch up marred finished paintwork to match original.

.3 Restore to new condition, finishes which have been damaged.

3.3 SYSTEM CLEANING

.1 Conduct final cleaning prior to turning system over to owner.

.1 Clean exterior of exposed equipment ductwork and piping.

.2 Replace filters in air handling equipment.

.3 Clean interior of system if construction activities, and/or in adequate protection of systems, has resulted in ingress of dirt and debris into system.

3.4 PROTECTION

.1 Protect equipment and systems openings from dirt, dust, and other foreign materials with materials appropriate to system.

END OF SECTION

Part 1 General

1.1 SUMMARY

.1 Section Includes:

.1 Electrical motors, drives and guards for mechanical equipment and systems.

.2 Supplier and installer responsibility indicated in Motor, Control and Equipment Schedule on electrical drawings and related mechanical responsibility is indicated on Mechanical Equipment Schedule on mechanical drawings.

.3 Control wiring and conduit is specified in Division 26 except for conduit, wiring and connections below 50 V which are related to control systems specified in Division 22 and 23. Refer to Division 26 for quality of materials and workmanship.

.2 Related Requirements

.1 This Section of the specification forms part of the Contract Documents and is to be read, interpreted and coordinated with all other parts.

1.2 REFERENCE STANDARDS

.1 American Society of Heating, Refrigeration and Air-Conditioning Engineers (ASHRAE)

.1 ASHRAE 90.1, Energy Standard for Buildings Except Low-Rise Residential Buildings (IESNA cosponsored; ANSI approved; Continuous Maintenance Standard).

.2 Electrical Equipment Manufacturers' Association Council (EEMAC)

1.3 ACTION AND INFORMATIONAL SUBMITTALS

.1 Submit in accordance with Section 01 33 00- Submittal Procedures.

.2 Product Data:

.1 Submit manufacturer's instructions, printed product literature and data sheets for motor data and include power requirements, motor efficiencies and noise data.

.3 Instructions: submit manufacturer's installation instructions.

.4 Closeout Submittals

.1 Provide maintenance data for motors, drives and guards for incorporation into manual specified in Section 01 78 00- Closeout Submittals .

1.4 QUALITY ASSURANCE

.1 Motors shall be ULC listed and/or CSA certified.

.2 Full Voltage Start Applications;

.1 All motors shall be in accordance with NEMA standard and CSA C390. Motors shall comply with the applicable portions of the Canadian Electrical Code

.2 Variable Frequency Drive and Soft Start

.1 All motors shall be in accordance with NEMA standards, Part 31 and inverter duty class. Motors shall comply with the applicable portions of the Canadian Electrical Code

.2 Motors shall be wound using inverter spike resistant magnet wire capable of 1600V.

.3 The noise level of each motor shall comply with NEMA standards and shall be less than 80dBa at 1 meter.

Part 2 Products

2.1 GENERAL

.1 Motors: premium efficiency, IE3, in accordance with ASHRAE 90.1.

2.2 MOTORS

.1 Provide motors for mechanical equipment as specified.

.2 Motors shall have standard voltage rating consistent with project distribution voltages.

.3 Motors under 373 W [1/2 HP] : speed as indicated, continuous duty, built-in overload protection, resilient mount, single phase, 120 V, unless otherwise specified or indicated.

.4 Motors 373 W [1/2 HP] and larger: EEMAC Class B, squirrel cage induction, speed as indicated, continuous duty, drip proof, ball bearing, maximum temperature rise 40 degrees C, 3 phase.

.5 All motors will be rated for a 1.15 service factor in a 40C ambient environment.

.6 Provide all motors with terminal boxes, suitable for power connections.

.7 Provide screw adjustable bases on all belt-connected motors.

.8 Motors exposed to outdoor temperatures to be lubricated with lubricants suitable for operation at 6C below design temperature as determined by the National Building Code of Canada.

.9 All motors 10 Hp and larger that are controlled by a VFD are to use dielectric grease bearings and a grounded kit with system of brass or stainless brushings.

2.3 BELT DRIVES

.1 Fit reinforced belts in sheave matched to drive. Multiple belts to be matched sets.

.2 Use cast iron or steel sheaves secured to shafts with removable keys unless otherwise indicated.

.3 For motors under 10 HP [7.5 kW] : standard adjustable pitch drive sheaves, having plus or minus 10% range. Use mid-position of range for specified r/min.

.4 For motors 7.5 kW [10 HP] and over: sheave with split tapered bushing and keyway having fixed pitch unless specifically required for item concerned. Provide sheave of correct size to suit balancing.

.5 Correct size of sheave determined during commissioning.

.6 Minimum drive rating: 1.5 times nameplate rating on motor. Keep overhung loads within manufacturer's design requirements on prime mover shafts.

.7 Motor slide rail adjustment plates to allow for centre line adjustment.

.8 Supply one set of spare belts for each set installed in accordance with Section 01 78 00-Closeout Submittals .

2.4 DRIVE GUARDS

.1 Provide guards for unprotected drives, exposed v-belts and shaft couplings in accordance with Workers Compensation Board Requirements.

.2 Guards for belt drives;

.1 Expanded metal screen welded to steel frame.

.2 Minimum 1.2 mm thick sheet metal tops and bottoms.

.3 38 mm dia holes on both shaft centres for insertion of tachometer.

.4 Removable for servicing.

.3 Provide means to permit lubrication and use of test instruments with guards in place.

.4 Install belt guards to allow movement of motors for adjusting belt tension.

.5 Guard for flexible coupling:

.1 "U" shaped, minimum 1.6 mm thick galvanized mild steel.

.2 Securely fasten in place.

.3 Removable for servicing.

.6 Unprotected fan inlets or outlets:

.1 Wire or expanded metal screen, galvanized, 19 mm mesh.

.2 Net free area of guard: not less than 80% of fan openings.

.3 Securely fasten in place.

.4 Removable for servicing.

Part 3 Execution

3.1 MANUFACTURER'S INSTRUCTIONS

.1 Compliance: comply with manufacturer's written recommendations or specifications, including product technical bulletins, handling, storage and installation instructions, and datasheet.

3.2 INSTALLATION

.1 Fasten securely in place.

.2 Make removable for servicing, easily returned into, and positively in position.

.3 Adjust belt tension and alignment as required.

.4 Install guards prior to putting equipment in service.

.5 Assist Div. 26 to ensure proper connection, thermal overload and controls are installed.

.6 Equipment which has more than voltage rating shall be fed from a single power source complete with a disconnect switch.

END OF SECTION

Part 1 General

1.1 RELATED REQUIREMENTS

.1 This Section of the specification forms part of the Contract Documents and is to be read, interpreted and coordinated with all other parts.

1.2 REFERENCE STANDARDS

.1 All referenced standards shall be to the most recent edition.

.2 CSA Group (CSA)

.1 CSA B149.1 , Natural Gas and Propane Installation code.

.2 CSA B139, Installation Code for Oil Burning Equipment.

.3 National Research Council (NRC)

.1 National Plumbing Code of Canada (NPC).

.2 National Fire Code of Canada (NFC).

Part 2 Products

2.1 Not Used

Part 3 Execution

3.1 APPLICATION

.1 Manufacturer's Instructions: comply with manufacturer's written recommendations, including product technical bulletins, handling, storage and installation instructions, and datasheets.

3.2 CONNECTIONS TO EQUIPMENT

.1 In accordance with manufacturer's instructions unless otherwise indicated.

.2 Use valves and either unions or flanges for isolation and ease of maintenance and assembly.

.3 Use double swing joints or flexible connections when equipment mounted on vibration isolation and when piping subject to movement.

3.3 CLEARANCES

.1 Provide clearance around systems, equipment and components for observation of operation, inspection, servicing, maintenance and as recommended by manufacturer.

.2 Maintain clearances as indicated in CSA-B149.1. Where minimum clearances are not provided to discharge of relief, intakes or sources of ignition etc. Relocate or pipe away as required.

.3 Provide space for disassembly, removal of equipment and components as recommended by manufacturer without interrupting operation of other system, equipment, components. Increase service clearances by 20% around equipment.

3.4 DRAINS

.1 Install piping with grade in direction of flow except as indicated.

.2 Install drain valve at low points in piping systems, at equipment and at section isolating valves.

.3 Pipe each drain valve discharge separately to above floor drain.

.1 Discharge to be visible.

.4 Drain valves: NPS 3/4 gate or globe valves unless indicated otherwise, with hose end male thread, cap and chain.

3.5 DIELECTRIC COUPLINGS

.1 General: compatible with system, to suit pressure rating of system.

.2 Locations: where dissimilar metals are joined.

.3 NPS 2 and under: isolating unions or bronze valves.

.4 Over NPS 2: isolating flanges.

3.6 PIPEWORK INSTALLATION

.1 Install pipework to CSA B149.2, National Plumbing Code of Canada and CSA-B51 as applicable.

.2 Protect openings against entry of foreign material.

.3 Install to isolate equipment and allow removal without interrupting operation of other equipment or systems.

.4 Assemble piping using fittings manufactured to ANSI standards.

.5 Saddle type branch fittings may be used on mains if branch line is no larger than half size of main.

.1 Hole saw (or drill) and ream main to maintain full inside diameter of branch line prior to welding saddle.

.6 Install exposed piping, equipment, rectangular cleanouts and similar items parallel or perpendicular to building lines.

.7 Install concealed pipework to minimize furring space, maximize headroom, conserve space.

.8 Slope piping, except where indicated, in direction of flow for positive drainage and venting.

.9 Install, except where indicated, to permit separate thermal insulation of each pipe.

.10 Group piping wherever possible and as indicated.

.11 Ream pipes, remove scale and other foreign material before assembly.

.12 Use eccentric reducers at pipe size changes to ensure positive drainage and venting.

.13 Provide for thermal expansion as indicated.

.14 Valves:

.1 Install in accessible locations.

.2 Remove interior parts before soldering.

.3 Install with stems above horizontal position unless indicated.

.4 Valves accessible for maintenance without removing adjacent piping.

.5 Install globe valves in bypass around control valves.

.6 Use ball valves at branch take-offs for isolating purposes except where specified.

.7 Install butterfly valves between weld neck flanges to ensure full compression of liner.

.8 Install ball valves for glycol service.

.9 Use chain operators on valves NPS 2 1/2 and larger where installed more than 2400 mm above floor in Mechanical Rooms.

.15 Check Valves:

.1 Install silent check valves in vertical pipes with downward flow and on discharge of pumps and as indicated.

.2 Install swing check valves in horizontal lines and as indicated.

3.7 SLEEVES

.1 General: install where pipes pass through masonry, concrete structures, fire rated assemblies, and as indicated.

.2 Material: schedule 40 black steel pipe.

.3 Construction: use annular fins continuously welded at mid-point at foundation walls and where sleeves extend above finished floors.

.4 Sizes: 6 mm minimum clearance between sleeve and uninsulated pipe or between sleeve and insulation.

.5 Installation:

.1 Concrete, masonry walls, concrete floors on grade: terminate flush with finished surface.

.2 Other floors: terminate 25 mm above finished floor.

.3 Before installation, paint exposed exterior surfaces with heavy application of zinc-rich paint to CAN/CGSB-1.181.

.6 Sealing:

.1 Foundation walls and below grade floors: fire retardant, waterproof non-hardening mastic.

.2 Elsewhere:

.1 Provide space for firestopping.

.2 Maintain fire rating integrity.

.3 Sleeves installed for future use: fill with lime plaster or other easily removable filler.

.4 Ensure no contact between copper pipe or tube and sleeve.

3.8 ESCUTCHEONS

.1 Install on pipes passing through walls, partitions, floors, and ceilings in finished areas.

.2 Construction: one piece type with set screws.

.1 Chrome or nickel plated brass or type 302 stainless steel..

.3 Sizes: outside diameter to cover opening or sleeve.

.1 Inside diameter to fit around pipe or outside of insulation if so provided.

3.9 PREPARATION FOR FIRE STOPPING

.1 Install firestopping within annular space between pipes, ducts, insulation and adjacent fire separation in accordance with Section 07 84 00- Fire Stopping .

.2 Uninsulated unheated pipes not subject to movement: no special preparation.

.3 Uninsulated heated pipes subject to movement: wrap with non-combustible smooth material to permit pipe movement without damaging fires topping material or installation.

.4 Insulated pipes and ducts: ensure integrity of insulation and vapour barriers.

3.10 FLUSHING OUT OF PIPING SYSTEMS

.1 Before start-up, clean interior of piping systems in accordance with requirements of relevant mechanical sections .

.2 Preparatory to acceptance, clean and refurbish equipment and leave in operating condition, including replacement of filters in piping systems.

3.11 PRESSURE TESTING OF EQUIPMENT AND PIPEWORK

.1 Advise 48 hours minimum prior to performance of pressure tests.

.2 Pipework: test as specified in relevant sections of heating, ventilating and air conditioning work.

.3 Maintain specified test pressure without loss for 2 hours minimum unless specified for longer period of time in relevant mechanical sections.

.4 Prior to tests, isolate equipment and other parts which are not designed to withstand test pressure or media.

.5 Conduct tests in presence of Departmental Representative .

.6 Pay costs for repairs or replacement, retesting, and making good. Departmental Representative to determine whether repair or replacement is appropriate.

.7 Insulate or conceal work only after approval and certification of tests.

3.12 PROVISION FOR EXPANSION

.1 Examine piping layout and notify Departmental Representative of any additional anchors or expansion joints required to adequately protection system.

.2 Make provision for expansion and contractor of all pipe work. All piping shall be anchored and supported in such a manner that strain and/or weight does not come upon any apparatus and pipe branch connection.

.3 Provide expansion joints and compensators as per manufacturers recommendations.

.4 Provide unions and/or flanges at all equipment.

END OF SECTION

Part 1 General

1.1 RELATED REQUIREMENTS

.1 This Section of the specification forms part of the Contract Documents and is to be read, interpreted and coordinated with all other parts.

1.2 REFERENCE STANDARDS

.1 All referenced standards shall be to the most recent edition.

.2 American Society of Mechanical Engineers (ASME)

.1 ASME B31.1, Power Piping.

.3 ASTM International (ASTM)

.1 ASTM A125, Standard Specification for Steel Springs, Helical, Heat-Treated.

.2 ASTM A307, Standard Specification for Carbon Steel Bolts and Studs, 60,000 PSI Tensile Strength.

.3 ASTM A563, Standard Specification for Carbon and Alloy Steel Nuts.

.4 National Research Council Canada (NRC)

.1 National Plumbing Code of Canada (NPC).

.5 Underwriter's Laboratories of Canada (ULC)

1.3 ACTION AND INFORMATIONAL SUBMITTALS

.1 Provide submittals in accordance with Section 01 33 00- Submittal Procedures.

.2 Product Data:

.1 Provide manufacturer's printed product literature and data sheets for hangers and supports and include product characteristics, performance criteria, physical size, finish and limitations to contractor retained Seismic Engineer.

.3 Shop Drawings:

.1 Submit drawings stamped and signed by professional engineer registered or licensed in Yukon Territory.

.2 Submit shop drawings for:

.1 Bases, hangers and supports.

.2 Connections to equipment and structure.

.3 Structural assemblies.

.4 Certificates:

.1 Submit certificates signed by manufacturer certifying that materials comply with specified performance characteristics and physical properties.

Part 2 Products

2.1 SYSTEM DESCRIPTION

.1 Design Requirements:

.1 Construct pipe hanger and support to manufacturer's recommendations utilizing manufacturer's regular production components, parts and assemblies.

.2 Base maximum load ratings on allowable stresses prescribed by ASME B31.1 or MSS SP58.

.3 Ensure that supports, guides, anchors do not transmit excessive quantities of heat to building structure.

.4 Design hangers and supports to support systems under conditions of operation, allow free expansion and contraction, prevent excessive stresses from being introduced into pipework or connected equipment.

.5 Provide for vertical adjustments after erection and during commissioning. Amount of adjustment in accordance with MSS SP58.

2.2 GENERAL

.1 Provide hangers and supports to secure equipment in place, prevent vibration, protect against damage from an earthquake, maintain grade, provide for expansion and contraction and accommodate insulation.

.2 The contractor is to engage and pay for the services of a Yukon Registered Professional Engineer to provide all required engineering services necessary for the complete design, sizing and detailing of all anchors, anchors supports, bracing and structural attachments for the project. Submit stamped shop drawings and a Letter of Design Assurance to the requirements of the Authority Having Jurisdiction and these specifications.

.3 Fabricate hangers, supports and sway braces in accordance with MSS SP58. ANSI B31.1 and

.4 Use components for intended design purpose only. Do not use for rigging or erection purposes.

.5 Set inserts in position in advance of concrete work, use a gridded system in equipment rooms.

.6 Support piping and equipment from the buildings structure unless specifically approved by the Engineer of Record. Coordinate attachment points with Structural Consultant.

.7 Hangers for copper pipe shall be copper plated or plastic dipped unless pipe hangers bear on insulation.

2.3 PIPE HANGERS

.1 Finishes:

.1 Pipe hangers and supports: galvanized after manufacture.

.2 Use hot dipped galvanizing process.

.3 Hangers for copper pipe shall be copper plated or plastic dipped unless pipe hangers bear on insulation.

.2 Upper attachment structural: suspension from lower flange of I-Beam:

.1 Cold piping NPS 2 maximum: malleable iron C-clamp with hardened steel cup point setscrew, locknut.

.2 Cold piping NPS 2 1/2 or greater, hot piping: malleable iron beam clamp, eye rod, jaws and extension with carbon steel retaining clip, tie rod, nuts and washers, ULC listed .

.3 Upper attachment structural: suspension from upper flange of I-Beam:

.1 Cold piping NPS 2 maximum: ductile iron top-of-beam C-clamp with hardened steel cup point setscrew, locknut and carbon steel retaining clip, ULC listed .

.2 Cold piping NPS 2 1/2 or greater, hot piping: malleable iron top-of-beam jaw-clamp with hooked rod, spring washer, plain washer and nut ULC listed.

.4 Upper attachment to concrete:

.1 Ceiling: carbon steel welded eye rod, clevis plate, clevis pin and cotters with weldless forged steel eye nut. Ensure eye 6 mm minimum greater than rod diameter.

.2 Concrete inserts: wedge shaped body with knockout protector plate UL Listed.

.3 All inserts shall be ICBO approved. Use only ICBO design load ratings.

.5 Hanger rods: threaded rod material to MSS SP58:

.1 Ensure that hanger rods are subject to tensile loading only.

.2 Provide linkages where lateral or axial movement of pipework is anticipated.

.6 Pipe attachments: material to MSS SP58:

.1 Attachments for cold piping, cast and steel piping: carbon steel galvanized.

.2 Attachments for copper piping: copper plated black steel.

.3 Use insulation shields for hot pipework.

.4 Oversize pipe hangers and supports.

.7 Adjustable clevis: material to MSS SP69 ULC listed, clevis bolt with nipple spacer and vertical adjustment nuts above and below clevis.

.1 Ensure "U" has hole in bottom for rivetting to insulation shields .

.8 Yoke style pipe roll: carbon steel yoke, rod and nuts with cast iron roll, to MSS SP69.

.9 U-bolts: carbon steel to MSS SP69 with 2 nuts at each end to ASTM A563.

.1 Finishes for steel pipework: galvanized.

.2 Finishes for copper, glass, brass or aluminum pipework: epoxy coated .

.10 Pipe rollers: cast iron roll and roll stand with carbon steel rod to MSS SP69.

2.4 CONSTANT SUPPORT SPRING HANGERS

.1 Springs: alloy steel to ASTM A125, shot peened, magnetic particle inspected, with +/-5% spring rate tolerance, tested for free height, spring rate, loaded height and provided with Certified Mill Test Report (CMTR).

.2 Load adjustability: 10 % minimum adjustability each side of calibrated load. Adjustment without special tools. Adjustments not to affect travel capabilities.

.3 Provide upper and lower factory set travel stops.

.4 Provide load adjustment scale for field adjustments.

.5 Total travel to be actual travel + 20%. Difference between total travel and actual travel 25 mm minimum.

.6 Individually calibrated scales on each side of support calibrated prior to shipment, complete with calibration record.

Part 3 Execution

3.1 MANUFACTURER'S INSTRUCTIONS

.1 Compliance: comply with manufacturer's written recommendations or specifications, including product technical bulletins, handling, storage and installation instructions, and datasheet.

3.2 INSTALLATION

.1 Install in accordance with:

.1 Manufacturer's instructions and recommendations.

.2 Vibration Control Devices:

.1 Install on piping systems at pumps, boilers, chillers, cooling towers, and as indicated.

.3 Clamps on riser piping:

.1 Support independent of connected horizontal pipework using riser clamps and riser clamp lugs welded to riser.

.2 Bolt-tightening torques to industry standards.

.3 Steel pipes: install below coupling or shear lugs welded to pipe.

.4 Cast iron pipes: install below joint.

.4 Clevis plates:

.1 Attach to concrete with 4 minimum concrete inserts, one at each corner.

.5 Provide supplementary structural steelwork where structural bearings do not exist or where concrete inserts are not in correct locations.

.6 Use approved constant support type hangers where:

.1 Vertical movement of pipework is 13 mm or more,

.2 Transfer of load to adjacent hangers or connected equipment is not permitted.

.7 Use variable support spring hangers where:

.1 Transfer of load to adjacent piping or to connected equipment is not critical.

.2 Variation in supporting effect does not exceed 25 % of total load.

3.3 HANGER SPACING

.1 Spacing and sizing as specified below or in accordance with referenced standard.

.1 Plumbing piping: to National Plumbing Code of Canada (NPC)

.2 Fire protection: to NFPA 13.

.3 Gas piping: To CAN/CSA-B149.1;

.4 Flexible joint roll groove pipe: in accordance with table below for steel, but not less than one hanger at joints. Table listings for straight runs without concentrated loads and where full linear movement is not required.

.5 Within 300 mm of each elbow.

.2 Hanger spacing table:

Maximum Pipe Size : NPS	Maximum Spacing Steel	Maximum Spacing Copper
½	1.8m	1.5m
¾, 1, 1-1/4	2.4 m	1.8 m
1-1/2	3.0 m	2.4 m
2	3.0 m	2.4 m
2-1/2	3.7 m	3.0 m
3	3.7 m	3.0 m
3-1/2	3.7 m	3.3 m
4	3.7 m	3.6 m
5	4.3 m	
6	4.3 m	
8	4.3 m	
10	4.9 m	
12	4.9 m	

.3 Pipework greater than NPS 12: to MSS SP69.

3.4 HANGER INSTALLATION

.1 Install hanger so that rod is vertical under operating conditions.

.2 Adjust hangers to equalize load.

.3 Support vertical piping at every floor. Support independently of horizontal piping where practical.

.4 Install plastic inserts between steel studs and piping

.5 Support from structural members. Where structural bearing does not exist or inserts are not in suitable locations, provide supplementary structural steel members.

3.5 HORIZONTAL MOVEMENT

.1 Angularity of rod hanger resulting from horizontal movement of pipework from cold to hot position not to exceed 4 degrees from vertical.

.2 Where horizontal pipe movement is less than 13 mm, offset pipe hanger and support so that rod hanger is vertical in the hot position.

3.6 FINAL ADJUSTMENT

.1 Adjust hangers and supports:

.1 Ensure that rod is vertical under operating conditions.

.2 Equalize loads.

.2 Adjustable clevis:

.1 Tighten hanger load nut securely to ensure proper hanger performance.

.2 Tighten upper nut after adjustment.

.3 C-clamps:

.1 Follow manufacturer's recommended written instructions and torque values when tightening C-clamps to bottom flange of beam.

.4 Beam clamps:

.1 Hammer jaw firmly against underside of beam.

END OF SECTION

Part 1 General

1.1 SUMMARY

.1 Section Includes:

.1 Vibration isolation materials and components, seismic control measures and their installation.

.2 Related Requirements

.1 This Section of the specification forms part of the Contract Documents and is to be read, interpreted and coordinated with all other parts.

1.2 REFERENCE STANDARDS

.1 All referenced standards shall be to the most recent edition.

.2 National Research Council Canada (NRC)

.1 National Building Code of Canada (NBC).

1.3 ACTION AND INFORMATIONAL SUBMITTALS

.1 Provide submittals in accordance with Section 01 33 00- Submittal Procedures.

.2 Product Data:

.1 Provide manufacturer's printed product literature and data sheets vibration and seismic restraint systems and include applicable product characteristics, performance criteria, physical size, finish and limitations to contractor retained Seismic Engineer.

.3 Shop Drawings

.1 Provide system shop drawing complete with performance and product data for vibration isolation systems.

.2 Submit seismic drawings stamped and signed by professional engineer registered or licensed in Yukon Territory, Canada. Provide detailed drawings of seismic control measures for equipment and piping.

Part 2 Products

2.1 GENERAL

.1 Size and shape of bases type and performance of vibration isolation as indicated.

.2 Provide vibration isolation on all motor driven equipment, piping, and ductwork such that the noise transmission to the occupied space by any other path then airborne is less than the airborne noise transmitted from mechanical space to occupied space. The following are considered minimum requirements to meet this criteria.

.3 Provide seismic restraint for all equipment, piping and ductwork including all seismic restraint related hardware for point of attachment to equipment through to and including the attachment to structure.

.4 Place isolators under equipment so that the minimum distance between adjacent corner isolators is at least equal to the height of the center of gravity of the equipment.

.5 Ensure isolation systems have a vertical natural frequency no higher than one third of the lowest forcing frequency.

.6 Factory supplied isolators shall meet the requirements of this section. Isolation supplier to check with pump supplier for number and location of isolators and if there is a requirement for inertia bases.

.7 Provide inertia bases or structural steel bases where specified or required by equipment manufacturer. Locate between vibrating equipment and vibration isolation.

.8 Use ductile materials in all vibration and seismic restraint equipment.

.9 Coordinate with Departmental Representative for requirements for drilled inserts.

.10 Provide flexible connections between equipment and piping where required by manufacturers to protect equipment from stress and reduce vibration in piping system.

2.2 SPRING MOUNT

.1 Zinc or cadmium plated hardware; housings coated with rust resistant paint.

.2 Type M1 - stable open spring: 6 mm minimum thick ribbed neoprene or rubber friction and acoustic pad, bonded under isolator and on isolator top plate; levelling bolt for rigidly mounting to equipment.

.3 Include spring mounts with snubbers for isolation up to 950 kg maximum.

.4 Complete with leveling device

2.3 HANGERS

.1 Colour coded springs, rust resistant, painted box type hangers. Arrange to permit hanger box or rod to move through a 30 degrees arc without metal to metal contact.

.2 Type H1 - stable spring, elastomeric element, cup with moulded isolation bushing which passes through hanger box.

2.4 SEISMIC CONTROL MEASURES

.1 General:

.1 The contractor is to engage and pay for the services of a Yukon Registered Professional Engineer to provide all required engineering services necessary for the complete design, sizing and detailing of all anchors, anchors supports, bracing and structural attachments used for seismic restraint systems for the project. Submit stamped shop drawings and a Letter of Design Assurance to the requirements of the Authority Having Jurisdiction and these specifications.

.2 Seismic control systems to work in every direction.

.3 Fasteners and attachment points to resist same maximum load as seismic restraint.

.4 Drilled or power driven anchors and fasteners not permitted.

.5 No equipment, equipment supports or mounts to fail before failure of structure.

.6 Supports of cast iron or threaded pipe not permitted.

.7 Seismic control measures not to interfere with integrity of firestopping.

.2 Static equipment:

.1 Anchor equipment to equipment supports. Anchor equipment supports to structure.

.2 Suspended equipment:

.1 Use one or more of following methods depending upon site conditions or as indicated :

.1 Install tight to structure.

.2 Cross brace in every direction.

.3 Brace back to structure.

.4 Cable restraint system.

.3 Seismic restraints:

.1 Cushioning action gentle and steady.

.2 Never reach metal-like stiffness.

.3 Vibration isolated equipment:

.1 Seismic control measures not to jeopardize noise and vibration isolation systems. Provide 6 to 9 mm clearance during normal operation of equipment and systems between seismic restraint and equipment.

.2 Incorporate seismic restraints into vibration isolation system to resist complete isolator unloading.

.3 As indicated.

.4 Piping systems:

.1 Fire protection systems: to NFPA 13. Including sizing and required calculation.

.2 Piping systems: hangers longer than 150 mm; brace at each hanger.

.3 Compatible with requirements for anchoring and guiding of piping systems.

.5 Bracing methods:

.1 Approved by Seismic Engineer .

.2 Structural angles or channels.

.3 Cable restraint system incorporating grommets, shackles and other hardware to ensure alignment of restraints and to avoid bending of cables at connection points. Incorporate neoprene into cable connections to reduce shock loads.

.6 Service and utilities entrance into building:

Part 3 Execution

3.1 MANUFACTURER'S INSTRUCTIONS

.1 Compliance: comply with manufacturer's written recommendations or specifications, including product technical bulletins, handling, storage and installation instructions, and datasheet.

3.2 INSTALLATION

.1 Seismic control measures to meet requirements of NBC .

.2 Install vibration isolation equipment in accordance with manufacturers instructions and adjust mountings to level equipment.

.3 Install Hanger Isolators on ceiling hung fans, pumps, silencers, and other vibrating sources. Size for minimum static deflection of 25mm.

.4 Ensure that flexible duct connections are installed with minimum of 50mm metal to metal gap. Use Flanges to ensure that connectors are clear of airstream.

END OF SECTION

Part 1 General

1.1 SUMMARY

.1 TAB is used throughout this Section to describe the process, methods and requirements of testing, adjusting and balancing for HVAC.

.2 TAB means to test, adjust and balance to perform in accordance with requirements of Contract Documents and to do other work as specified in this section.

1.2 TESTING AND BALANCING

.1 Employ an independent testing and balancing agency specializing in this work to test, adjust and balance mechanical systems installed under this contract.

.2 TAB: performed in accordance with the requirements of standard under which TAB Firm's qualifications are approved:

.1 Associated Air Balance Council, (AABC) National Standards for Total System Balance, MN-1 .

.2 National Environmental Balancing Bureau (NEBB) TABES, Procedural Standards for Testing, Adjusting, Balancing of Environmental Systems .

.3 Sheet Metal and Air Conditioning Contractors' National Association (SMACNA), HVAC TAB HVAC Systems - Testing, Adjusting and Balancing .

.3 Use TAB Standard provisions, including checklists, and report forms to satisfy Contract requirements.

.4 Where instrument manufacturer calibration recommendations are more stringent than those listed in TAB Standard, use manufacturer's recommendations.

.5 TAB Standard quality assurance provisions such as performance guarantees form part of this contract.

.1 For systems or system components not covered in TAB Standard, use TAB procedures developed by TAB Specialist.

.2 Where new procedures, and requirements, are applicable to Contract requirements have been published or adopted by body responsible for TAB Standard used (AABC, NEBB, or TABB), requirements and recommendations contained in these procedures and requirements are mandatory.

1.3 PURPOSE OF TAB

.1 Test to verify proper and safe operation, determine actual point of performance, evaluate qualitative and quantitative performance of equipment, systems and controls at design, average and low loads using actual or simulated loads

.2 Adjust and regulate equipment and systems to meet specified performance requirements and to achieve specified interaction with other related systems under normal and emergency loads and operating conditions.

.3 Balance systems and equipment to regulate flow rates to match load requirements over full operating ranges.

1.4 EXCEPTIONS

.1 TAB of systems and equipment regulated by codes, standards to satisfaction of authority having jurisdiction.

1.5 RESPONSIBILITY

.1 TAB agency shall be responsible to;

.1 Ensure that all mechanical systems are complete and ready to be balanced and provide sufficient time for testing and balancing prior to substantial performance.

.2 Make corrections to achieve performance without delay, include al corrections made during the balancing procedures on “as-built drawings”. Mechanical contractor to provide as-built information to TAB agent prior to commencement of work.

.3 Adjust fan drives, change sheaves and belts and adjust speeds as required to achieve system performance. Sheaves, belts and pulley to be supplied by mechanical contractor.

.4 Coordinate with Controls Contractor to make adjustment to controls system to facilitate balancing.

.5 Check alignment and tension of motors and belts.

.6 Consult with the Consultant to clarify design intent where necessary.

1.6 CO-ORDINATION

.1 Schedule time required for TAB (including repairs, re-testing) into project construction and completion schedule to ensure completion before acceptance of project.

.2 Do TAB of each system independently and subsequently, where interlocked with other systems, in unison with those systems.

1.7 PRE-TAB REVIEW

.1 Review Contract Documents before project construction is started and confirm in writing to mechanical contractor regarding adequacy of provisions for TAB and other aspects of design and installation pertinent to success of TAB.

.2 Review specified standards and report Departmental Representative in writing proposed procedures which vary from standard.

.3 During construction, co-ordinate location and installation of TAB devices, equipment, accessories, measurement ports and fittings.

1.8 START-UP

.1 Follow start-up procedures as recommended by equipment manufacturer unless specified otherwise.

.2 Follow special start-up procedures specified elsewhere in Division 23.

1.9 OPERATION OF SYSTEMS DURING TAB

.1 Operate systems for length of time required for TAB and as required Departmental Representative for verification of TAB reports.

1.10 START OF TAB

.1 Start TAB when building is essentially completed, including:

.2 Installation of ceilings, doors, windows, other construction affecting TAB.

.3 Application of weatherstripping, sealing, and caulking.

.4 Pressure, leakage, other tests specified elsewhere Division 23.

.5 Provisions for TAB installed and operational.

.6 Start-up, verification for proper, normal and safe operation of mechanical and associated electrical and control systems affecting TAB including but not limited to:

.1 Proper thermal overload protection in place for electrical equipment.

.2 Air systems:

.1 Filters in place, clean.

.2 Duct systems clean.

.3 Ducts, are airtight to within specified tolerances.

.4 Correct fan rotation.

.5 Outlets installed, volume control dampers open.

1.11 APPLICATION TOLERANCES

.1 Do TAB to following tolerances of design values:

.1 HVAC systems: plus 10 %, minus 10 %.

1.12 ACCURACY TOLERANCES

.1 Measured values accurate to within plus or minus 2 % of actual values.

1.13 INSTRUMENTS

.1 Calibrate in accordance with requirements of most stringent of referenced standard for either applicable system or HVAC system.

.2 Provide certificate of calibration to with preliminary TAB report.

1.14 TAB REPORT

.1 Format in accordance with referenced standard .

.2 TAB report to show results in SI units and to include:

.1 Project record drawings.

.2 Field notes to clearly identify unusual conditions or issues affecting TAB.

.3 Measurements: to include as appropriate for systems, equipment, components, controls: air velocity, static pressure, flow rate, pressure drop (or loss), temperatures (dry bulb, wet bulb, dewpoint), duct cross-sectional area, RPM, electrical power, voltage, noise, vibration.

.4 Locations of equipment measurements: to include as appropriate:

.1 Inlet and outlet of dampers, filter, coil, pump, terminal unit, heating element, fan, other equipment causing changes in conditions.

.2 At controllers, controlled device.

.5 Locations of systems measurements to include as appropriate: main ducts, main branch, sub-branch, run-out (or grille, register or diffuser).

.3 Submit 3 copies of TAB Report to Departmental Representative for verification and approval, in English in D-ring binders, complete with index tabs.

1.15 SETTINGS

.1 After TAB is completed to satisfaction of Departmental Representative , replace drive guards, close access doors, lock devices in set positions, ensure sensors are at required settings.

.2 Permanently mark settings on valves, dampers, or other adjustment devices to allow restoration at any time during life of facility. Do not eradicate or cover markings.

.3 Set and lock all memory stop balancing devices and record value in TAB report.

.4 Seal all holes with snap plugs at completion of TAB

1.16 COMPLETION OF TAB

.1 TAB considered complete when final TAB Report received and approved by Departmental Representative .

.2 Repair any damages to finishes cause by performance of TAB.

1.17 AIR SYSTEMS

.1 Standard: TAB to most stringent of TAB standards.

.2 Do TAB of following systems, equipment, components, and associated controls:

.1 Adjust duct and terminal balance dampers and adjust or change drive sheaves and fan blade pitch to obtain design quantities at each outlet and inlet.

.2 Use terminal balance dampers to regulate air quantities only to the extent that adjustments do not create objectionable air motion of sound levels. The sheet metal sub contractor shall provide additional dampers where required by TAB agency to achieve satisfactory performance.

.3 Measure air quantities at each air terminal.

.4 Maintain the design relationship between the supply and exhaust air system quantities.

.5 Work with controls contractor to adjust and verify damper positions.

.6 Balance all air systems at 100% outdoor air and relief air. Check fan motor does not overload and main duct pressure does not change substantially.

.7 Indicate in report;

.1 Time and date of testing

.2 Outdoor air temperatures during testing

.3 System schematics including damper positions, design and measured air quantities at each piece of equipment and outlet.

.4 Main branch traverses.

.5 Maximum and minimum outdoor air quantities.

.6 Static pressures at inlet and outlet of fans.

.7 Fan and motor speed.

.8 Mortor size, amps, and voltage.

.9 Entering air and leaving air temperatures and pressure drop at ERV.

.10 Supply and exhaust air flows at each fan and outlet.

.11 Supply air temperatures.

.12 Fan performance curves for each fan and air handling system.

Part 2 Products

2.1 NOT USED

.1 Not used.

Part 3 Execution

3.1 NOT USED

.1 Not used.

END OF SECTION

Part 1 General

1.1 RELATED REQUIREMENTS

.1 This Section of the specification forms part of the Contract Documents and is to be read, interpreted and coordinated with all other parts

1.2 REFERENCE STANDARDS

.1 All referenced standards shall be to the most recent edition.

.2 American Society of Heating, Refrigeration and Air Conditioning Engineers (ASHRAE)

.1 ANSI/ASHRAE/IESNA 90.1, SI; Energy Standard for Buildings Except Low-Rise Residential Buildings.

.3 ASTM International (ASTM)

.1 ASTM B209M, Standard Specification for Aluminum and Aluminum-Alloy Sheet and Plate (Metric).

.2 ASTM C335, Standard Test Method for Steady State Heat Transfer Properties of Pipe Insulation.

.3 ASTM C411, Standard Test Method for Hot-Surface Performance of High-Temperature Thermal Insulation.

.4 ASTM C449/C449M, Standard Specification for Mineral Fiber-Hydraulic-Setting Thermal Insulating and Finishing Cement.

.5 ASTM C547, Standard Specification for Mineral Fiber Pipe Insulation.

.6 ASTM C553, Standard Specification for Mineral Fiber Blanket Thermal Insulation for Commercial and Industrial Applications.

.7 ASTM C612, Standard Specification for Mineral Fiber Block and Board Thermal Insulation.

.8 ASTM C795, Standard Specification for Thermal Insulation for Use in Contact with Austenitic Stainless Steel.

.9 ASTM C921, Standard Practice for Determining the Properties of Jacketing Materials for Thermal Insulation.

.4 Canadian General Standards Board (CGSB)

.1 CGSB 51-GP-52Ma-[89] , Vapour Barrier, Jacket and Facing Material for Pipe, Duct and Equipment Thermal Insulation.

.5 Underwriters Laboratories of Canada (ULC)

.1 CAN/ULC-S102, Method of Test for Surface Burning Characteristics of Building Materials and Assemblies.

.2 CAN/ULC-S701, Standard for Thermal Insulation, Polystyrene, Boards and Pipe Covering.

1.3 DEFINITIONS

.1 For purposes of this section:

.1 "CONCEALED" - insulated mechanical services and equipment in suspended ceilings and non-accessible chases and furred-in spaces.

.2 "EXPOSED" - means "not concealed" as previously defined.

.3 Insulation systems - insulation material, fasteners, jackets, and other accessories.

.2 TIAC Codes:

.1 CRD: Code Round Ductwork,

.2 CRF: Code Rectangular Finish.

1.4 ACTION AND INFORMATIONAL SUBMITTALS

.1 Provide submittals in accordance with Section 01 33 00- Submittal Procedures .

.2 Product Data:

.1 Provide manufacturer's printed product literature and datasheets for duct insulation, and include product characteristics, performance criteria, physical size, finish and limitations.

.1 Description of equipment giving manufacturer's name, type, model, year and capacity.

.2 Details of operation, servicing and maintenance.

.3 Recommended spare parts list.

.3 Manufacturers' Instructions:

.1 Provide manufacture's written duct insulation jointing recommendations. and special handling criteria and installation sequence.

1.5 DELIVERY, STORAGE AND HANDLING

.1 Deliver materials to site in original factory packaging, labelled with manufacturer's name, address and ULC markings. Store materials indoors.

.2 Storage and Protection:

.1 Protect from weather, construction traffic.

.2 Protect against damage.

.3 Store at temperatures and conditions required by manufacturer.

Part 2 Products

2.1 FIRE AND SMOKE RATING

.1 To CAN/ULC-S102:

.1 Maximum flame spread rating: 25 .

.2 Maximum smoke developed rating: 50.

.3 ULC listed for use in non-combustible construction

2.2 INSULATION

.1 Mineral fibre: as specified includes glass fibre, rock wool, slag wool.

.2 Thermal conductivity ("k" factor) not to exceed specified values at 24 degrees C mean temperature when tested in accordance with ASTM C335.

.3 TIAC Code C-1: Glass fibre blanket to ASTM C553 faced with factory applied vapour retarder jacket to CGSB 51-GP-52Ma (as scheduled in PART 3 of this section).

.1 Glass fibre: to ASTM C553.

.2 Maximum "k" factor: 0.0409 W/(m.C) to ASTM C553.

.3 Standard of Acceptance: John Manville Microlite Type 75, Manson, Knauf

2.3 ACCESSORIES

.1 General: ULC labeled for less than 25 flame spread and less than 50 smoke developed.

.2 Vapour retarder lap adhesive:

.1 Water based, fire retardant type, compatible with insulation.

.3 Indoor Vapour Retarder Finish:

.1 Vinyl emulsion type acrylic, compatible with insulation.

.4 Tape: self-adhesive, aluminum, reinforced , 100 mm wide minimum.

.5 Contact adhesive: quick-setting

.6 Canvas adhesive: washable.

.7 Tie wire: 1.5 mm stainless steel.

.8 Banding: 19 mm wide, 0.5 mm thick stainless steel.

.9 Facing: 25 mm stainless steel hexagonal wire mesh stitched on one face of insulation with expanded metal lath on other face.

.10 Fasteners: 4mm diameter pins with 35 mm diameter clips, length to suit thickness of insulation.

Part 3 Execution

3.1 APPLICATION

.1 Manufacturer's Instructions: comply with manufacturer's written recommendations, including product technical bulletins, handling, storage and installation instructions, and datasheets.

3.2 PRE-INSTALLATION REQUIREMENTS

.1 Pressure test ductwork systems complete, witness and certify.

.2 Ensure surfaces are clean, dry, free from foreign material.

3.3 INSTALLATION

.1 Apply insulation in a clean workmanlike manner so that the finished product is uniform, smooth in finish and pleasing to the eye with longitudinal seams concealed from view.

.2 Terminate insulation short of all control, smoke and fire dampers so as to not interfere with their operation.

.3 Install in accordance with TIAC National Standards.

.4 Apply materials in accordance with manufacturer's instructions and as indicated.

.5 Use 2 layers with staggered joints when required nominal thickness exceeds 75 mm.

.6 Maintain uninterrupted continuity and integrity of vapour retarder jacket and finishes.

.1 Ensure hangers, and supports are outside vapour retarder jacket.

.7 Hangers and supports in accordance with Section 23 05 29- Hangers and Supports for HVAC Piping and Equipment .

.1 Apply high compressive strength insulation where insulation may be compressed by weight of ductwork.

.8 Install fasteners at 300 mm on centre in horizontal and vertical directions, minimum 2 rows each side.

3.4 EXTERNAL FLEXIBLE INSULATION WITH VAPOR BARRIER

.1 Install insulation with insulation adhesive applied in 150mm wide strips on 300 mm centers.

.2 On rectangular ductwork over 610mm in width, spotweld pins 6mm longer than insulation thickness, one per square foot minimum. Impale insulation over pins and hold in place using metal or nylon clips.

.3 Adhere foil faced vapour barrier tape over butt joints, raw edges, washers and other points of penetration of the vapour barrier jacket.

3.5 DUCTWORK INSULATION SCHEDULE

.1 Insulation types and thicknesses: conform to following table:

	TIAC Code	Vapour Retarder	Thickness (mm)
Outside air ducts	C-1	Yes	100
Exhaust duct between dampers and louvres	C-1	No	100
Combustion Air Ducting	C-1	Yes	50mm

END OF SECTION

Part 1 General

1.1 RELATED REQUIREMENTS

.1 This Section of the specification forms part of the Contract Documents and is to be read, interpreted and coordinated with all other parts

1.2 ACTION AND INFORMATIONAL SUBMITTALS

.1 Submit in accordance with Section 01 33 00- Submittal Procedures .

.2 Product Data:

.1 Submit manufacturer's instructions, printed product literature and data sheets for electric and electronic control system for HVAC and include product characteristics, performance criteria, physical size, finish and limitations.

.3 Certificates: submit certificates signed by manufacturer certifying that materials comply with specified performance characteristics and physical properties.

1.3 DELIVERY, STORAGE AND HANDLING

.1 Delivery and Acceptance Requirements: deliver materials to site in original factory packaging, labelled with manufacturer's name and address.

.2 Storage and Handling Requirements:

.1 Store materials in accordance with manufacturer's recommendations in clean, dry, well-ventilated area.

.2 Replace defective or damaged materials with new.

Part 2 Products

2.1 THERMOSTAT (LOW VOLTAGE)

.1 Low voltage wall thermostat:

.1 For use on 24 V circuit at 1.5 A capacity.

.2 LCD display

.3 User adjustable

.4 Temperature setting range: 10 degrees C to 25 degrees C.

.5 With sub-base.

2.2 SUMP PUMP HIGH LEVEL ALARM

.1 Single stage high level alarm, includes alarm panel, float and accessories,

.1 Single power source, 201V/1/60, 5w alarm condition, secondary 9V supply

.2 NEMA 1 enclosure. Corrosion resistant,

.3 Temperature rating up to 60C

.4 CSA approved.

.2 Alarm panel shall include audible and visual alarms with silence function.

.3 Standard of Acceptance: Myers SA-1

2.3 GAS DETECTION SYSTEM

.1 Gas detection system shall consist of panel and sensors to achieve full coverage of area and ensure accuracy sensing compatible gas.

.2 Panels: Micro-controller based design, 16 gauge steel enclosure, NEMA 4x rated. Panel shall include relay outputs to DPDT 10A circuits for fan interlock.

.1 Alarm: Visual and audible alarm with silence function

.2 System Test function

.3 Power: 120V/1/60

.4 Sensor:

.1 Electromechanical type

.2 Compatible with CO/NO_2.

.3 Rated to operating temperature of -20C to 40C

.4 0-100ppm (CO) and 0-3ppm NO_2

.5 Adjustable trip points, set to 25ppm (CO) and 1 ppm (NO_2)

.6 Coverage Area: 50’ radius

.5 Standard of Acceptance: Armstrong AMC-1AD1/2

2.4 VARIABLE SPEED DRIVE CONTROLLER

.1 Provided with ERV and installed by this Division.

2.5 HEAT PUMP CONTROLLER

.1 Provided with Heat Pump System and installed by this Division.

2.6 THERMOSTAT COVERS

.1 Provide cover for thermostats and heat pump controls

.2 Cover to be constructed of clear plastic which resists yellowing from UV.

.3 Provide universal keyed lock with common keying.

.4 Cabinet to be vented around the perimeter

.5 Standard of Acceptance: Honeywell TG series.

2.7 DAMPER OPERATOR

.1 2-position, 120 volt, spring return to fail-safe position, end switch, visual position indicator, manual override crank, sized to provide adequate shut off and full open under operating conditions, CSA approved, fully programmable, 90 second run time.

.2 Standard of Acceptance: Honeywell, Siemens, Belimo.

2.8 OCCUPANCY SENSOR

.1 Dual technology occupancy sensor with ultrasonic and PIR detection, 360 degree coverage, ceiling mounted, 30 min time off delay, 24v relay output, ulc listed, min. 1000 sq ft area of coverage.

.2 Standard of Acceptance: Watts Stopper.

2.9 OVERRIDE TIMER

.1 Mechanical, 0-1 hr range, wind up spin time, rated for 120V/15A.

.2 Standard of Acceptance: Intermatic FF60MC

Part 3 Execution

3.1 EXAMINATION

.1 Verification of Conditions: verify that conditions of substrate previously installed under other Sections or Contracts are acceptable for electric and electronic control systems installation in accordance with manufacturer's written instructions.

.1 Visually inspect substrate in presence of Departmental Representative.

.2 Inform Departmental Representative of unacceptable conditions immediately upon discovery.

.3 Proceed with installation only after unacceptable conditions have been remedied and after receipt of written approval to proceed from Owner.

3.2 INSTALLATION

.1 Install control devices. Adjust as required to achieve proper functionality.

.2 Mount controls at 1200mm AFF.

.3 On outside wall, mount thermostats on bracket or insulated pad 25 mm from exterior wall.

.4 Install remote sensing device and capillary tube in metallic conduit. Conduit enclosing capillary tube must not touch heater or heating cable.

3.3 SUMP PUMP HIGH LEVEL ALARM

.1 Install alarm as per manufactures’ recommendations

.2 Coordinate with Div. 26 for installation of under slab conduit.

.3 Adjust float and secure at height indicate.

.4 Test alarm system and include test report in O&M.

3.4 GAS DETECTION SYSTEM

.1 Install panel and sensors at locations indicated. Ensure adequate coverage of area served.

.2 Coordinate with Div. 26 for installation of power wiring and relay outputs.

.3 Mount at height recommended by manufacturer, in absence of such a recommendation mount at 1200mm

.4 Calibrate sensor and confirm operation. Adjust trip points to values indicated.

3.5 SEQUENCE OF OPERATION

.1 Plumbing System

.1 Sump pump to operate based on integral on-off float.

.2 High level alarm to operate based on integral float. Alarm condition to sound at panel.

.2 Ventilation System

.1 ERV-1

.1 ERV-1 to operate based occupancy sensor provided by this division

.2 In occupied mode;

.1 Motorized dampers to move to the full open position and ERV to energize.

.2 ERV to operate at speed determined by balancer. Adjust VFD to achieve flow as required.

.3 Internal recovery dampers to operate based on internal PLC logic.

.3 In unoccupied mode, dampers to close and unit to de-energise.

.2 Gas Detection System, EF-1

.1 On detection of gas in excess of sensor trip point, panel to alarm and output relay to close, adjust trip point to:

.1 CO: 25ppm

.2 NO_2: 1 ppm

.2 Relay to operate motorized dampers on intake and exhaust and energize EF-1.

.3 EF-1 to operate while in alarm condition.

.4 When levels drop below trip point, EF-1 to denergize and dampers to close.

.5 Provide manual 0-1hr override timer to open dampers and energize EF-1.

.3 Heating System

.1 Unit heater, UH-1

.1 Unit heater to operate based on a call for heat from thermostat. Set thermostat at 15C adjustable.

.2 Air Source Heat Pumps

.1 Indoor units to operate based on internal controller and shall energize on call for heating or cooling as determined by thermostat controller.

.2 Air source unit to be locked out and external auxiliary electric heat to be enabled to maintain set point when air source heat pump can no longer meet setpoint, COP drops below 1 or outdoor air temperature drops below -25C, as determined by integral control system. Coordinate with Div. 26 for relay out to UH.

END OF SECTION

Part 1 General

1.1 SUMMARY

.1 Section Includes:

.1 Materials and installation for piping, valves and fittings for gas fired equipment.

.2 Related Requirements

.1 This Section of the specification forms part of the Contract Documents and is to be read, interpreted and coordinated with all other parts

1.2 REFERENCE STANDARDS

.1 All referenced standards shall be to the most recent edition.

.2 American Society of Mechanical Engineers (ASME)

.1 ASME B16.5 , Pipe Flanges and Flanged Fittings.

.2 ASME B16.18, Cast Copper Alloy Solder Joint Pressure Fittings.

.3 ASME B16.22, Wrought Copper and Copper Alloy Solder-Joint Pressure Fittings.

.4 ASME B18.2.1, Square and Hex Bolts and Screws Inch Series.

.3 ASTM International (ASTM)

.1 ASTM A47/A47M , Standard Specification for Ferritic Malleable Iron Castings.

.2 ASTM A53/A53M , Standard Specification for Pipe, Steel, Black and Hot-Dipped, Zinc Coated, Welded and Seamless.

.3 ASTM B75M , Standard Specification for Seamless Copper Tube [Metric] .

.4 ASTM B837 , Standard Specification for Seamless Copper Tube for Natural Gas and Liquefied Petroleum (LP) Gas Fuel Distribution Systems.

.4 CSA Group (CSA)

.1 CSA W47.1 , Certification of Companies for Fusion Welding of Steel.

.5 Canadian Standards Association (CSA)/Canadian Gas Association (CGA)

.1 CAN/CSA B149.1HB , Natural Gas and Propane Installation Code Handbook.

.2 CAN/CSA B149.2 , Propane Storage and Handling Code.

1.3 ACTION AND INFORMATIONAL SUBMITTALS

.1 Submittals in accordance with Section 01 33 00- Submittal Procedures .

.2 Product Data:

.1 Submit manufacturer's printed product literature, specifications and datasheet for valves, fittings and equipment.

.3 Instructions: submit manufacturer's installation instructions.

.4 Closeout Submittals: submit maintenance and engineering data for incorporation into manual specified in Section 01 78 00- Closeout Submittals .

Part 2 Products

2.1 PIPE

.1 Piping upstream of first stage regulator:

.1 Steel pipe: Up to NPS 2, to ASTM A53/A53M, screwed Schedule 80, seamless. Paint piping with minimum 1 coat of corrosion resistant primer and 2 coats of yellow paint.

.2 Copper tube: Type K, externally coated by factory with extruded yellow polyethylene jacket, to ASTM B88.

.2 Piping downstream of first stage regulator;

.1 Steel pipe: Up to NPS 2, to ASTM A53/A53M, screwed Schedule 40, seamless. Paint piping with minimum 1 coat of corrosion resistant primer and 2 coats of yellow paint.

.2 Copper tube: Type K, externally coated by factory with extruded yellow polyethylene jacket, to ASTM B88.

2.2 JOINTING MATERIAL

.1 Screwed fittings: sealant to CAN/ULC-S642.

.2 Welded fittings: to CSA W47.1.

.3 Flare nuts; to UNS C3770

.4 Flange gaskets: nonmetallic flat.

.5 Brazing: to ASTM B837 .

2.3 FITTINGS

.1 Steel pipe fittings, screwed, flanged or welded:

.1 Malleable iron or steel to ANSI B16.3 and threaded to ANSI B1.20.1, screwed, banded, Class 150.

.2 Steel pipe flanges and flanged fittings: to ASME B16.5.

.3 Welding: butt-welding fittings.

.4 Unions: malleable iron, brass to iron, ground seat, to ASTM A47/A47M.

.5 Bolts and nuts: to ASME B18.2.1.

.6 Nipples: schedule 40, to ASTM A53/A53M.

.2 Copper pipe fittings, flared or brazed:

.1 Cast copper fittings: to ASME B16.18.

.2 Wrought copper fittings: to ASME B16.22.

2.4 VALVES

.1 Isolation:

.1 Ball Valve: CSA Approved, rated to 41bar, Water/Oil/Gas (WOG) Service, quarter turn, line size, full port, PTFE seat with secondary O-ring, brass body, nickel plated stem.

.2 Acceptable Products: OPW 21BV, Kitz 58

2.5 REGULATORS

.1 CSA/ULC listed, spring loaded self-operated design, tight closing, cast iron body with corrosive restive epoxy enamel, internal relief, rated for outdoor use down to -40C, capacity and pressure as per equipment schedule.

.1 Acceptable Products: Rego, Fisher, Maxitrol

Part 3 Execution

3.1 MANUFACTURER'S INSTRUCTIONS

.1 Compliance: comply with manufacturer's written recommendations or specifications, including product technical bulletins, handling, storage and installation instructions, and datasheet.

3.2 PIPING

.1 Install in accordance with CAN/CSA B149.2 and CAN/CSA B149.1, supplemented as specified. Provide all required vent piping to atmosphere including vent piping from regulators.

.2 Piping to be as follows;

.1 For above ground piping, painted schedule 40 steel, copper tubing, or flexible stainless.

.2 Identify in accordance with CSA-B149.1

.3 Provide bollards as indicated at propane entry point where indicated, coordinate with G.C.

.4 Piping to be pressure tested in accordance with the referenced standard. Piping to be purged prior to start-up.

.5 Ream pipes and clean scale and dirt, inside and out, prior to assembly. Install as close as building as practical to minimize furring and conserve headroom.

.6 Slope piping down in direction of flow to low points.

.7 Install full pipe diameter, 150mm long drip points:

.1 At low points in piping system.

.2 At connections to equipment.

.3 At connection to manifolds.

.8 Provide clearance for access and for maintenance.

.9 Provide flexible connections and shut-off valves to each piece of equipment.

3.3 VALVES

.1 Install valves with stems upright or horizontal unless otherwise approved by Consultant.

.2 Install valves at branch take-offs to isolate pieces of equipment, and as indicated.

.3 Ensure handles are accessible for isolation and maintenance.

3.4 ADJUSTING

.1 Purging: purge after pressure test in accordance with CAN/CSA B149.2 and CAN/CSA B149.1 .

.2 Pre-Start-Up Inspections:

.1 Check vents from regulators, control valves, terminate outside building in approved location, protected against blockage, damage.

.2 Check gas trains, entire installation is approved by authority having jurisdiction.

.3 Operation tests:

.1 Measure gas pressure at gas metre outlet and at burner manifold.

.2 Verify settings, operation, venting of high and low pressure cut-outs, alarms.

.3 Check terminals of vents for gas pressure regulators.

.4 Record values for each system and each piece of equipment. Record results and provided in system start-up report.

END OF SECTION

Part 1 General

1.1 RELATED REQUIREMENTS

.1 This Section of the specification forms part of the Contract Documents and is to be read, interpreted and coordinated with all other parts

1.2 REFERENCE STANDARDS

.1 All referenced standards shall be to the most recent edition.

.2 ASME

.1 ASME B16.22 , Wrought Copper and Copper Alloy Solder - Joint Pressure Fittings.

.2 ASME B16.24 , Cast Copper Pipe Flanges and Flanged Fittings: Class 150, 300, 600, 900, 1500 and 2500.

.3 ASME B16.26 , Cast Copper Alloy Fittings for Flared Copper Tubes.

.4 ASME B31.5, Refrigeration Piping and Heat Transfer Components.

.3 ASTM International (ASTM)

.1 ASTM A307, Standard Specification for Carbon Steel Bolts and Studs, and Threaded Rod 60,000 PSI Tensile Strength.

.2 ASTM B280, Standard Specification for Seamless Copper Tube for Air Conditioning and Refrigeration Field Service.

.4 CSA Group (CSA)

.1 CSA B52 , B52 Package, Mechanical Refrigeration Code.

.5 Environment Canada (EC)

.1 EPS 1/RA/1, Environmental Code of Practice for the Elimination of Fluorocarbon Emissions from Refrigeration and Air Conditioning Systems.

1.3 ACTION AND INFORMATIONAL SUBMITTALS

.1 Submit in accordance with Section 01 33 00- Submittal Procedures .

.2 Product Data:

.1 Submit manufacturer's instructions, printed product literature and data sheets for refrigerant equipment and include product characteristics, performance criteria, physical size, finish and limitations.

.2 Include electrical control schematics for each type of system and submit for review.

1.4 CLOSEOUT SUBMITTALS

.1 Submit in accordance with Section 01 78 00- Closeout Submittals .

.2 Operation and Maintenance Data: submit operation and maintenance data for refrigerant equipment and control schematics for incorporation into manual.

Part 2 Products

2.1 TUBING

.1 Processed for refrigeration installations, deoxidized, dehydrated and sealed.

.1 Hard copper: to ASTM B88, Type L .

.2 Annealed copper: to ASTM B280, with minimum wall thickness as per CSA B52 and ASME B31.5.

2.2 FITTINGS

.1 Service: design pressure 2070 kPa and temperature 121 degrees C.

.2 Brazed:

.1 Fittings: wrought copper to ASME B16.22.

.2 Joints: silver solder and non-corrosive flux.

.3 Flanged:

.1 Bronze or brass, to ASME B16.24, Class 150 and Class 300.

.2 Gaskets: suitable for service.

.3 Bolts, nuts and washers: to ASTM A307, heavy series.

.4 Flared:

.1 Bronze or brass, for refrigeration, to ASME B16.26.

2.3 PIPE SLEEVES

.1 Hard copper or steel, sized to provide 6 mm clearance around between sleeve and uninsulated pipe or between sleeve and insulation.

2.4 VALVES

.1 22 mm and under: Class 500, 3.5 Mpa, globe or angle non-directional type, diaphragm, packless type, with forged brass body and bonnet, moisture proof seal for below freezing applications, brazed connections.

.2 Over 22 mm: Class 375, 2.5 Mpa, globe or angle type, diaphragm, packless type, back-seating, cap seal, with cast bronze body and bonnet, moisture proof seal for below freezing applications, brazed connections.

Part 3 Execution

3.1 MANUFACTURER'S INSTRUCTIONS

.1 Compliance: comply with manufacturer's written recommendations or specifications, including product technical bulletins, handling, storage and installation instructions, and datasheet.

3.2 GENERAL

.1 Install in accordance with CSA B52, EPS1/RA/1 and ASME B31.5 Section 23 05 05-Installation of Pipework.

3.3 BRAZING PROCEDURES

.1 Bleed inert gas into pipe during brazing.

.2 Remove valve internal parts, solenoid valve coils, sight glass.

.3 Do not apply heat near expansion valve and bulb.

3.4 PIPING INSTALLATION

.1 General:

.1 Hard drawn copper tubing: do not bend. Minimize use of fittings,

.2 Soft annealed copper tubing: bend without crimping or constriction .

.2 Hot gas lines:

.1 Pitch at least 1:240 down in direction of flow to prevent oil return to compressor during operation.

.2 Provide trap at base of risers greater than 2400 mm high and at each 7600 mm thereafter.

.3 Provide inverted deep trap at top of risers.

.4 Provide double risers for compressors having capacity modulation.

.1 Large riser: install traps as specified.

.2 Small riser: size for 5.1 m^3/s at minimum load. Connect upstream of traps on large riser.

.3 Provide isolation an each individual branch line to allow isolation and repair without draining down the system.

.4 Piping run on building exterior to be insulated and clad with light gauge aluminium cladding.

3.5 PRESSURE AND LEAK TESTING

.1 Close valves on factory charged equipment and other equipment not designed for test pressures.

.2 Leak test to CSA B52 before evacuation to 2 MPa and 1 MPa on high and low sides respectively.

.3 Test procedure: build pressure up to 35 kPa with refrigerant gas on high and low sides. Supplement with nitrogen to required test pressure. Test for leaks with electronic or halide detector. Repair leaks and repeat tests.

3.6 FIELD QUALITY CONTROL

.1 Site Tests/Inspection:

.1 Close service valves on factory charged equipment.

.2 Ambient temperatures to be at least 13]degrees C for at least 1] hours before and during dehydration.

.3 Use copper lines of largest practical size to reduce evacuation time.

.4 Use two-stage vacuum pump with gas ballast on 2nd stage capable of pulling 5 Pa absolute and filled with dehydrated oil.

.5 Measure system pressure with vacuum gauge. Take readings with valve between vacuum pump and system closed.

.6 Triple evacuate system components containing gases other than correct refrigerant or having lost holding charge as follows:

.1 Twice to 14 Pa absolute and hold for 4 hours.

.2 Break vacuum with refrigerant to 14 kPa.

.3 Final to 5 Pa absolute and hold for at least 12 hours.

.4 Isolate pump from system, record vacuum and time readings until stabilization of vacuum.

.7 Charging:

.1 Charge system through filter-drier and charging valve on high side. Low side charging not permitted.

.2 With compressors off, charge only amount necessary for proper operation of system. If system pressures equalize before system is fully charged, close charging valve and start up. With unit operating, add remainder of charge to system.

.3 Re-purge charging line if refrigerant container is changed during charging process.

.8 Checks:

.1 Make checks and measurements as per manufacturer's operation and maintenance instructions.

.2 Record and report measurements in O&M

3.7 DEMONSTRATION

.1 Instructions:

.1 Post instructions in frame with glass cover in accordance with Section 01 78 00-Closeout Submittals and CSA B52.

3.8 CLEANING

.1 Progress Cleaning: clean in accordance with Section 01 74 00- Cleaning .

.1 Leave Work area clean at end of each day.

.2 Final Cleaning: upon completion remove surplus materials, rubbish, tools and equipment in accordance with Section 01 74 00- Cleaning .

END OF SECTION

Part 1 General

1.1 RELATED REQUIREMENTS

.1 This Section of the specification forms part of the Contract Documents and is to be read, interpreted and coordinated with all other parts.

1.2 REFERENCE STANDARDS

.1 All referenced standards shall be to the most recent edition.

.2 American Society of Heating, Refrigerating and Air-Conditioning Engineers (ASHRAE)

.3 ASTM International (ASTM)

.1 ASTM A480/A480M, Standard Specification for General Requirements for Flat-Rolled Stainless and Heat-Resisting Steel Plate, Sheet and Strip.

.2 ASTM A635/A635M, Standard Specification for Steel, Sheet and Strip, Heavy-Thickness Coils, Hot-Rolled, Alloy, Carbon, Structural, High-Strength Low-Alloy, and High-Strength Low-Alloy with Improved Formability, General Requirements for.

.3 ASTM A653/A653M, Standard Specification for Steel Sheet, Zinc Coated (Galvanized) or Zinc-Iron Alloy Coated (Galvannealed) by the Hot-Dip Process.

.4 National Fire Protection Association (NFPA)

.1 NFPA 90A, Standard for the Installation of Air-Conditioning and Ventilating Systems.

.2 NFPA 90B, Standard for the Installation of Warm Air Heating and Air-Conditioning Systems.

.3 NFPA 96, Standard for Ventilation Control and Fire Protection of Commercial Cooking Operations.

.5 Sheet Metal and Air Conditioning Contractors' National Association (SMACNA)

.1 SMACNA HVAC Duct Construction Standards - Metal and Flexible.

.2 SMACNA HVAC Air Duct Leakage Test Manual.

.3 IAQ Guideline for Occupied Buildings Under Construction.

1.3 ACTION AND INFORMATIONAL SUBMITTALS

.1 Submit in accordance with Section 01 33 00- Submittal Procedures.

.2 Product Data:

.1 Submit manufacturer's instructions, printed product literature and data sheets for products specified in Sect 2 other than shop fabricated ductwork and fittings. Include product characteristics, performance criteria, physical size, finish and limitations.

Part 2 Products

2.1 SEAL CLASSIFICATION

.1 Classification as follows:

Maximum Pressure Pa	SMACNA Seal Class
500	B
250	B
125	C
125	C

.2 Seal classification:

.1 Class A: longitudinal seams, transverse joints, duct wall penetrations and connections made airtight with sealant and tape.

.2 Class B: longitudinal seams, transverse joints and connections made airtight with sealant .

.3 Class C: transverse joints and connections made air tight with sealant. Longitudinal seams unsealed.

.4 Unsealed seams and joints.

2.2 SEALANT

.1 Sealant: oil resistant, water borne , polymer type flame resistant duct sealant. Grey in colour. Temperature range of minus 30 degrees C to plus 93 degrees C.

.1 Acceptable Manufacturers: John Manville, Manson Insulation, Knauf Insualtion

2.3 FITTINGS

.1 Fabrication: to SMACNA .

.2 Radiused elbows:

.1 Rectangular: short radius with single thickness turning vanes, standard radius.

.2 Round: smooth radius, five piece, centreline radius: 1.5 times diameter.

.3 Transitions:

.1 Diverging: 20 degrees maximum included angle.

.2 Converging: 30 degrees maximum included angle.

2.4 GALVANIZED STEEL

.1 Lock forming quality: to ASTM A653/A653M, Z90 zinc coating.

.2 Thickness, fabrication and reinforcement:

.1 Rectangular: Lock formed to SMACNA .

.2 Round: Mechanically locked flat seam to SMACNA

.3 Joints: to SMACNA.

2.5 HANGERS AND SUPPORTS

.1 Hangers and Supports: in accordance with Section 23 05 29- Hangers and Supports for HVAC Piping and Equipment.

.1 Strap hangers: of same material as duct but next sheet metal thickness heavier than duct .

.1 Maximum size duct supported by strap hanger: 500 .

.2 Hanger configuration: to SMACNA .

.3 Hangers: galvanized steel angle with galvanized steel rods as per following table and SMACNA:

Duct Size (mm)	Angle Size (mm)	Rod Size (mm)
up to 750	25 x 25 x 3	6
751 to 1050	40 x 40 x 3	6
1051 to 1500	40 x 40 x 3	10
1501 to 2100	50 x 50 x 3	10
2101 to 2400	50 x 50 x 5	10
2401 and over	50 x 50 x 6	10

.4 Upper hanger attachments:

.1 For concrete: manufactured concrete inserts.

.2 For steel joist: manufactured joist clamp .

.3 For steel beams: manufactured beam clamps:

.4 Attachments to be reviewed and approved by Seismic Engineer.

Part 3 Execution

3.1 GENERAL

.1 Do work in accordance with referenced standard. Construct and install ductwork to suit dust pressure class designation and so that ductwork does not drum. All flat surface of rectangular ductwork are to be cross broken.

.2 Do not break continuity of insulation vapour barrier with hangers or rods.

.1 Insulate strap hangers 100 mm beyond insulated duct.

.3 Confirm routing of all ductwork at the site and site measure ductwork prior to fabrication. Note that duct dimensions may be revised to suit site routing and building element requirements if dimension revisions are reviewed with and approved by the Departmental Representative. Duct dimension revisions are not considered grounds for an extra cost.

.4 Provided flexible duct connections to fan powered equipment.

.5 Support horizontal rectangular ducts inside the building with trapeze hangers in accordance with SMACNA. All materials to be galvanised construction.

.6 Coordinate with TAB agent for the necessary provision to complete TAB. Include required straight duct runs, balancing dampers, access and clearances.

.7 Apply sealant by brush or gun to cleaned metal surfaces. Where bare ductwork is exposed apply neat uniform lines of sealant. Randomly brushed, sloppy looking sealant will be rejected and must be repaired at contractor's expense.

.8 Provided roof curbs with flashing and counterflashing on all duct penetrations. Coordinate work with Div. 1.

3.2 HANGERS

.1 Strap hangers: install in accordance with SMACNA.

.2 Angle hangers: complete with locking nuts and washers.

.3 Hanger spacing: in accordance with SMACNA and as follows;

Duct Size	Spacing
(mm)	(mm)
to 1500	3000
1501 and over	2500

3.3 SEALING AND TAPING

.1 Apply sealant in accordance with SMACNA .

.2 Bed tape in sealant and recoat with minimum of 1 coat of sealant to manufacturers recommendations.

.3 Apply sealant by brush or gun to cleaned metal surfaces. Where bare ductwork is exposed apply neat uniform lines of sealant. Randomly brushed, sloppy looking sealant will be rejected and must be repaired at contractor's expense.

END OF SECTION

Part 1 General

1.1 RELATED REQUIREMENTS

.1 This Section of the specification forms part of the Contract Documents and is to be read, interpreted and coordinated with all other parts

1.2 REFERENCE STANDARDS

.1 All referenced standards shall be to the most recent edition.

.2 Sheet Metal and Air Conditioning Contractors' National Association (SMACNA)

.1 SMACNA - HVAC Duct Construction Standards - Metal and Flexible.

1.3 ACTION AND INFORMATIONAL SUBMITTALS

.1 Submit in accordance with Section 01 33 00- Submittal Procedures .

.2 Product Data:

.1 Submit manufacturer's instructions, printed product literature and data sheets for air duct accessories and include product characteristics, performance criteria, physical size, finish and limitations.

.2 Indicate:

.1 Flexible connections.

.2 Duct access doors.

.3 Turning vanes.

.4 Instrument test ports.

1.4 DELIVERY, STORAGE AND HANDLING

.1 Deliver, store and handle materials in accordance with Section 01 61 00- Common Product Requirements .

.2 Delivery and Acceptance Requirements: deliver materials to site in original factory packaging, labelled with manufacturer's name and address.

.3 Storage and Handling Requirements:

.1 Store materials indoors and in accordance with manufacturer's recommendations in clean, dry, well-ventilated area.

.2 Replace defective or damaged materials with new.

Part 2 Products

2.1 GENERAL

.1 Manufacture in accordance with SMACNA - HVAC Duct Construction Standards.

2.2 FLEXIBLE CONNECTIONS

.1 Frame: galvanized sheet metal frame.

.2 Material:

.1 Fire resistant, self extinguishing, neoprene coated glass fabric, temperature rated at minus 40 degrees C to plus 90 degrees C, density of 1.3 kg/m^2.

.3 Acceptable Product: DuroDyne Neoprene

2.3 ACCESS DOORS IN DUCTS

.1 Non-Insulated Ducts: sandwich construction of same material as duct, one sheet metal thickness heavier, minimum 0.6 mm thick complete with sheet metal angle frame.

.2 Insulated Ducts: sandwich construction of same material as duct, one sheet metal thickness heavier, minimum 0.6 mm thick complete with sheet metal angle frame and 25 mm thick rigid glass fibre insulation.

.3 Gaskets: neoprene or foam rubber .

.4 Hardware:

.1 Up to 300 x 300 mm: two sash locks.

.2 301 to 450 mm: four sash locks.

.3 451 to 1000 mm: piano hinge and minimum two sash locks.

.4 Doors over 1000 mm: piano hinge and two handles operable from both sides.

.5 Hold open devices.

.5 Acceptable Products: Controlled Air AD-FL

2.4 BIRD SCREEN

.1 Heavy Gauge galvanised steel mesh 12mm x 12mm secured in a rigid galvanized steel or aluminium framework. Constructed to be removable.

Part 3 Execution

3.1 INSTALLATION

.1 Flexible Connections:

.1 Install in following locations:

.1 Inlets and outlets to supply air units and fans.

.2 Inlets and outlets of exhaust and return air fans.

.3 As indicated.

.2 Length of connection: 100 mm.

.3 Minimum distance between metal parts when system in operation: 75 mm.

.4 Install in accordance with recommendations of SMACNA.

.5 When fan is running:

.1 Ducting on sides of flexible connection to be in alignment.

.2 Ensure slack material in flexible connection.

.2 Access Doors and Viewing Panels:

.1 Size: As required to provide suitable access.

.2 Locations:

.1 Fire and smoke dampers.

.2 Control dampers.

.3 Backdraft dampers.

.4 Fans.

.5 Control equipment and sensors.

.6 Devices requiring maintenance.

.7 Required by code.

.8 Reheat coils.

.9 Every 20m to allow duct cleaning.

.10 Elsewhere as indicated.

.3 Instrument Test Ports:

.1 General:

.1 Install in accordance with recommendations of SMACNA and in accordance with manufacturer's instructions.

.2 Locate to permit easy manipulation of instruments.

.3 Install insulation port extensions as required.

.4 Locations:

.1 For traverse readings:

.1 Ducted inlets to roof and wall exhausters.

.2 Inlets and outlets of other fan systems.

.3 Main and sub-main ducts.

.4 And as indicated.

.2 For temperature readings:

.1 At outside air intakes.

.2 In mixed air applications in locations as approved Departmental Representative .

.3 At inlet and outlet of coils.

.4 Downstream of junctions of two converging air streams of different temperatures.

.5 And as indicated.

.4 Turning Vanes:

.1 Provide turning vanes in ductwork elbows where shown on the drawings and wherever else required where, due to site conditions and installation

constraints, duct elbow radius cannot be maintained in accordance with SMACNA requirements. Install in accordance with SMACNA requirements.

END OF SECTION

Part 1 General

1.1 RELATED REQUIREMENTS

.1 This Section of the specification forms part of the Contract Documents and is to be read, interpreted and coordinated with all other parts

1.2 REFERENCE STANDARDS

.1 All referenced standards shall be to the most recent edition.

.2 Sheet Metal and Air Conditioning National Association (SMACNA)

.1 SMACNA HVAC Duct Construction Standards, Metal and Flexible.

1.3 ACTION AND INFORMATIONAL SUBMITTALS

.1 Submit in accordance with Section 01 33 00- Submittal Procedures .

.2 Product Data:

.1 Submit manufacturer's instructions, printed product literature and data sheets for dampers and include product characteristics, performance criteria, physical size, finish and limitations.

Part 2 Products

2.1 GENERAL

.1 Manufacture to SMACNA standards.

2.2 SINGLE BLADE DAMPERS

.1 Fabricate from same material as duct, but one sheet metal thickness heavier. V-groove stiffened.

.2 Size and configuration to recommendations of SMACNA up to maximum size of 300mm

.3 Locking quadrant with shaft extension to accommodate insulation thickness .

.4 Inside and outside nylon end bearings.

.5 Channel frame of same material as adjacent duct, complete with angle stop.

Part 3 Execution

3.1 INSTALLATION

.1 Install where indicated and at points in ductwork in for supply, return and exhaust systems where branches are taken from larger ducts as required for proper air

balancing. Provide balancing dampers for each run out to grille or diffuser as close as practical to main duct while still being accessible.

.2 Install in accordance with recommendations of SMACNA and in accordance with manufacturer's instructions.

.3 Dampers: vibration free.

.4 Ensure damper operators are observable and accessible.

.5 Corrections and adjustments conducted as required to facilitate balancing.

.6 Work with TAB agent to ensure a complete and balanceable system.

.7 Align lever parallel with blade damper.

END OF SECTION

Part 1 General

1.1 RELATED REQUIREMENTS

.1 This Section of the specification forms part of the Contract Documents and is to be read, interpreted and coordinated with all other parts

1.2 REFERENCE STANDARDS

.1 All referenced standards shall be to the most recent edition.

.2 ASTM International (ASTM)

.1 ASTM A653/A653M, Standard Specification for Steel Sheet, Zinc-Coated (Galvanized) or Zinc-Iron Alloy-Coated (Galvannealed) by Hot-Dip Process.

1.3 ACTION AND INFORMATIONAL SUBMITTALS

.1 Submit in accordance with Section 01 33 00- Submittal Procedures.

.2 Product Data:

.1 Submit manufacturer's instructions, printed product literature and data sheets for dampers and include product characteristics, performance criteria, physical size, finish and limitations.

1.4 DELIVERY, STORAGE AND HANDLING

.1 Deliver, store and handle materials in accordance with Section 01 61 00- Common Product Requirements .

.2 Delivery and Acceptance Requirements: deliver materials to site in original factory packaging, labelled with manufacturer's name and address.

.3 Storage and Handling Requirements:

.1 Store materials in dry location and in accordance with manufacturer's recommendations in clean, dry, well-ventilated area.

.2 Replace defective or damaged materials with new.

Part 2 Products

2.1 MULTI-LEAF DAMPERS

.1 Frame: 100mm deep, extruded flanged aluminum , AMCA certified

.2 Leakage: maximum certified leakage of 0.6% at 2.5kPa differential static.

.3 Blade: Opposed blade for open-shut control dampers, parallel for mixing applications. 2mm extruded interlocking blades, complete with extruded silicon frame gasket and EPDM blade gasket.

.4 Pressure fit self-lubricated bronze bearings.

Linkage: plated steel tie rods, brass pivots and plated steel brackets, complete with plated steel control rod.

.5 Operator: to the requirements of Div. 25.

.6 Insulated aluminum dampers:

.1 Frames: as per above with thermally broken insulated on all four sides with injected polyurethane foam to R6.6

.2 Blades: as per above with insulated and thermally broken blades with expanded polyurethane core.

.7 Acceptable Products: TAMCO 9000 “Extreme Cold”

Part 3 Execution

3.1 INSTALLATION

.1 Install where indicated.

.2 Install in accordance with recommendations of SMACNA and manufacturer's instructions.

.3 Seal multiple damper modules with silicon sealant. Secure in place as to prevent rattle. And prevent air bypass.

.4 Provide thermally insulated dampers at all fresh air and exhaust ductwork communicating with the outdoors.

.5 Install access door adjacent to each damper. See Section 23 33 00- Air Duct Accessories .

.6 Ensure dampers are observable and accessible.

.7 Coordinate with Div. 25 for damper actuator sizing and installation.

END OF SECTION

Part 1 General

1.1 RELATED REQUIREMENTS

.1 This Section of the specification forms part of the Contract Documents and is to be read, interpreted and coordinated with all other parts.

1.2 REFERENCE STANDARDS

.1 All referenced standards shall be to the most recent edition.

.2 American National Standards Institute/Air Movement and Control Association (ANSI/AMCA)

.1 ANSI/AMCA Standard 99, Standards Handbook.

.2 ANSI/ASHRAE 51 (ANSI/AMCA 210), Laboratory Methods of Testing Fans for Aerodynamic Performance Rating.

.3 ANSI/AMCA Standard 300 , Reverberant Room Method for Sound Testing of Fans.

.4 ANSI/AMCA Standard 301, Methods for Calculating Fan Sound Ratings from Laboratory Test Data.

1.3 ACTION AND INFORMATIONAL SUBMITTALS

.1 Submit in accordance with Section 01 33 00- Submittal Procedures .

.2 Product Data:

.1 Submit manufacturer's instructions, printed product literature and data sheets for HVAC fans and include product characteristics, performance criteria, physical size, finish and limitations.

.3 Shop Drawings:

.1 Provide:

.1 Fan performance curves showing point of operation, kW [bhp] and efficiency.

.2 Sound rating data at point of operation as measured to applicable AMCA standards.

.2 Indicate:

.1 Motors, sheaves, bearings, shaft details, vibration isolation requirements

.2 Minimum performance achievable with variable speed controllers.

1.4 MAINTENANCE MATERIAL SUBMITTALS

.1 Extra Materials:

.1 Submit in accordance with Section 01 78 00- Closeout Submittals .

.1 Provide:

.1 Matched sets of belts.

.2 Furnish list of individual manufacturer's recommended spare parts for equipment, include:

.1 Bearings and seals.

.2 Addresses of suppliers.

.3 List of specialized tools necessary for adjusting, repairing or replacing.

Part 2 Products

2.1 SYSTEM DESCRIPTION

.1 Performance Requirements:

.1 Catalogued or published ratings for manufactured items: obtained from tests carried out by manufacturer or those ordered by manufacturer from independent testing agency signifying adherence to codes and standards in force.

.2 Capacity: flow rate, static pressure, kW, revolutions per minute, power, model, size, sound power data and as indicated on schedule.

.3 Fans: statically and dynamically balanced, constructed in conformity with ANSI/AMCA Standard 99.

.4 Sound ratings: comply with ANSI/AMCA Standard 301, tested to ANSI/AMCA Standard 300.

.5 Performance ratings: based on tests performed in accordance with ANSI/AMCA Standard 210.

2.2 FANS GENERAL

.1 Motors:

.1 In accordance with Section 23 05 13- Common Motors Requirements for HVAC Equipment supplemented as specified herein.

.2 For use with variable speed controllers where indicated. Motors powered by VFD controllers shall be EEMAC class B with Type F “inverter duty insulation. 1.1.5 service factor.

.3 Sizes as indicated.

.2 Provide fans with generate noise levels on site not exceeding level calculated from ASHRAE or as specified.

.3 Fans to be statically and dynamically balanced, constructed in accordance with AMCA. Dynamically balanced fans to be balanced to 1.5-mm/s vibration amplitude, maximum measured on bearing housing. Provide fan shafts with critical speed at least 1.5 times operational speed.

.4 Accessories and hardware: matched sets of V-belt drives, adjustable slide rail motor bases, belt guards, coupling guards fan, safety screens as indicated and as specified in Section 23 05 13- Common Motor Requirements for HVAC Equipment , outlet dampers and vanes and as indicated.

.5 Factory primed before assembly in colour standard to manufacturer.

.6 Scroll casing drains: as indicated.

.7 Bearing lubrication systems plus extension lubrication tubes where bearings are not easily accessible.

.8 Vibration isolation: to Section 23 05 48- Vibration and Seismic Controls for HVAC Piping and Equipment .

.9 Flexible connections: to Section 23 33 00- Air Duct Accessories

.10 For belt drive motors less than 10hp provide adjustable pitch drives having +- 15% range, use mid-position of range for specified RPM. Drive rating shall be 150% of motor rating. Otherwise, provide adjustable VFD or ECM speed control on direct drive fans.

.11 Bearing shall have a minimum of L-10 life of 100,000 hours based on maximum speed of fan class.

.12 Provide seismic restraint in accordance with Section 23 05 48.

2.3 CENTRIFUGAL FANS

.1 Fan wheels:

.1 Welded steel construction.

.2 Maximum operating speed of centrifugal fans not more than 40 % of first critical speed.

.3 Backward inclined blades, or as indicated.

.2 Bearings: heavy duty pillow-block grease lubricated ball or roller self aligning type with oil retaining, dust excluding seals and a certified minimum rated life of 100,000 hours.

.3 Housings:

.1 Volute with inlet cones: Enamel painted, fabricated steel, braced, and with welded supports.

.2 Provide bolted airtight access doors with handles and gaskets.

.3 20mm drain and plug.

.4 Rust prevention on shafts.

.5 Adjustable motor plate

.4 Variable volume control devices:

.1 Mounted by fan manufacturer.

.2 Adjustable inlet vanes: operated from a centre mechanism linked to each damper vane. Support each vane at ends in bronze bearing . On DWDI fans

interconnect vanes to operate in unison. Provide locking devices for manual operation.

2.4 PROPELLER FANS

.1 Fabricate multibladed propellers of fabricated steel, galvanized construction for panels, impeller and housing, with grease lubricated ball bearings, with extended lubrication fittings, suited for operating in any position, belt driven, complete with motor as indicated.

.2 Fan to seismically rated and designed to Cat F ASCE 7-05

.3 Provide wall housing, adjustable motor pulley, blade guards, disconnect, louver, bird screen and motorized control damper with gasketted edges.

.4 Damper to Section 23 33 15.

Part 3 Execution

3.1 FAN INSTALLATION

.1 Install fans as indicated, complete with resilient mountings specified in Section 23 05 48- Vibration and Seismic Controls for HVAC Piping and Equipment , flexible electrical leads and flexible connections in accordance with Section 23 33 00- Air Duct Accessories.

.2 Provide sheaves and belts required for final air balance.

.3 Bearings and extension tubes to be easily accessible.

.4 Access doors and access panels to be easily accessible.

.5 Install fans with flexible connected on inlet ductwork and discharge as applicable. Install connections such that connectors are clear of air stream. Provide flange connections as necessary and ensure accurate alignment of duct to fan.

.6 Provide safety screens where fan inlet or outlet is exposed.

.7 Mount fans where indicated shown. Coordinate framing with G.C.

3.2 ANCHOR BOLTS AND TEMPLATES

.1 Size anchor bolts to withstand seismic acceleration and velocity forces anticipated.

END OF SECTION

Part 1 General

1.1 RELATED REQUIREMENTS

.1 This Section of the specification forms part of the Contract Documents and is to be read, interpreted and coordinated with all other parts.

1.2 ACTION AND INFORMATIONAL SUBMITTALS

.1 Submit in accordance with Section 01 33 00- Submittal Procedures.

.2 Product Data:

.1 Submit manufacturer's instructions, printed product literature and data sheets for diffusers, registers and grilles and include product characteristics, performance criteria, physical size, finish and limitations.

.2 Indicate following:

.1 Capacity.

.2 Throw and terminal velocity.

.3 Noise criteria.

.4 Pressure drop.

.5 Neck velocity.

1.3 MAINTENANCE MATERIAL SUBMITTALS

.1 Extra Materials:

.1 Provide maintenance materials in accordance with Section 01 78 00- Closeout Submittals.

.2 Include:

.1 Keys for volume control adjustment.

.2 Keys for air flow pattern adjustment.

Part 2 Products

2.1 SYSTEM DESCRIPTION

.1 Performance Requirements:

.1 Catalogued or published ratings for manufactured items: obtained from tests carried out by manufacturer or those ordered by manufacturer from independent testing agency signifying adherence to codes and standards.

2.2 GENERAL

.1 To meet capacity, pressure drop, terminal velocity, throw, noise level, neck velocity as indicated.

.2 Frames:

.1 Full perimeter gaskets.

.2 Plaster frames where set into plaster or gypsum board and as specified .

.3 Concealed fasteners.

.3 Concealed manual volume control damper operators.

.4 Colour: as directed Div. 1. Confirm prior to ordering.

.5 Manufacturer shall match specified performance data and indicate comparisons for each product.

.6 Provide concealed baffles where necessary to direct air away from wall, columns and other obstructions in the radius of air terminal.

Part 3 Execution

3.1 INSTALLATION

.1 Provide grilles, registers and diffusers where shown on the drawings. Wherever possible diffusers and grilles to be the product on one manufacturer.

.2 Connect grilles and diffusers in accordance with SMACNA HVAC Duct Constructions Standards.

.3 Adjust baffles and vanes for optimal air distribution in space.

END OF SECTION

Part 1 General

1.1 RELATED REQUIREMENTS

.1 This Section of the specification forms part of the Contract Documents and is to be read, interpreted and coordinated with all other parts.

1.2 REFERENCE STANDARDS

.1 National Building Code of Canada [2015] (NBC).

.2 Sheet Metal and Air Conditioning Contractors' National Association (SMACNA)

1.3 ACTION AND INFORMATIONAL SUBMITTALS

.1 Submit in accordance with Section 01 33 00- Submittal Procedures .

.2 Product Data:

.1 Submit manufacturer's instructions, printed product literature and data sheets for louvers, intakes and vents and include product characteristics, performance criteria, physical size, finish and limitations.

.2 Indicate following:

.1 Air Flow

.2 Pressure drop.

.3 Face area.

.4 Free area.

Part 2 Products

2.1 SYSTEM DESCRIPTION

.1 Performance Requirements:

.1 Catalogued or published ratings for manufactured items: obtained from tests carried out by manufacturer or those ordered by manufacturer from independent testing agency signifying adherence to codes and standards.

2.2 FIXED LOUVRES - ALUMINUM

.1 Construction: welded with exposed joints ground flush and smooth.

.2 Material: extruded aluminum alloy 6063-T5 .

.3 Blade: stormproof pattern with centre watershed in blade, drainable, reinforcing bosses and maximum blade length of 1500 mm. AMCA certified for water penetration. Minimum 55% free area.

.4 Frame, head, sill and jamb: 100 or 150 mm deep one piece extruded aluminum, minimum 3 mm thick with approved caulking slot, integral to unit .

.5 Mullions: at 1500 mm maximum centres.

.6 Fastenings: stainless steel SAE-194-8F with SAE-194-SFB nuts and resilient neoprene washers between aluminum and head of bolt, or between nut, ss washer and aluminum body.

.7 Screen: 12 mm birdscreen mesh, 2 mm diameter wire on inside face of louvres in formed U-frame.

.8 Finish: factory applied Duranar finish or equivalent. Colour: to match siding and as approved by Departmental Representative. Confirm prior to ordering

Part 3 Execution

3.1 INSTALLATION

.1 Provide louvers as indicated. Coordinate framing with G.C.

.2 Consult Div. 1 specifications for color requirements and confirm with Architectural prior to ordering.

.3 In accordance with manufacturer's and SMACNA recommendations.

.4 Reinforce and brace as indicated.

.5 Anchor securely into opening. Seal with caulking to ensure weather tightness as recommended by manufacturer..

END OF SECTION

Part 1 General

1.1 RELATED REQUIREMENTS

.1 This Section of the specification forms part of the Contract Documents and is to be read, interpreted and coordinated with all other parts.

1.2 REFERENCE STANDARDS

.1 All referenced standards shall be to the most recent edition.

.2 Sheet Metal and Air Conditioning Contractors National Association (SMACNA)

.3 Underwriters' Laboratories of Canada (ULC)

.4 CSA Group (CSA)

.1 CSA B149.1 , Natural Gas and Propane Installation Code.

1.3 ACTION AND INFORMATIONAL SUBMITTALS

.1 Submit in accordance with Section 01 33 00- Submittal Procedures.

.2 Product Data:

.1 Submit manufacturer's instructions, printed product literature and data sheets for chimneys and stacks and include product characteristics, performance criteria, physical size, finish and limitations.

.3 Shop Drawings:

.1 Indicate following:

.1 Methods of sealing sections.

.2 Methods of expansion.

.3 Details of thimbles.

.4 Bases/Foundations.

.5 Supports.

.6 Guy details.

Part 2 Products

2.1 CPVC VENTING – TYPE BH

.1 ULC listed to ULC-S1738, ULC-S636 ASTM-F441.

.2 Minimum SCH 40. Class IIB certification and is certified for use up to and including 90°C (194ºF).

.3 Assembled using ULC listed joint sealant to ASTM F-493 and as recommended by manufacture.

.4 Provide joint stabilizers where required by manufacturer.

.5 Listed for appliances with flue temperatures up to 90C.

.6 Acceptable Products: IPEX S636

2.2 ACCESSORIES

.1 Cleanouts: bolted, gasketted type, full size of breeching, as indicated.

.2 Base Tee: Cleanout access and drain connection.

.3 Hangers and supports: in accordance with manufacturers literature and SMACNA.

.4 Rain cap or nozzle as indicated.

.5 Expansion sleeves with heat resistant caulking, held in place as indicated.

.6 Thimbles: Compatible with vent type,

Part 3 Execution

3.1 INSTALLATION - GENERAL

.1 Follow manufacturer's and SMACNA installation recommendations for shop fabricated components.

.2 Support chimneys at bottom, roof and intermediate as required by manufacturer and CAN/CSA-B149.1

.3 Install thimbles where penetrating roof, floor, ceiling to maintain required clearances. Pack annular space with heat resistant caulking.

.4 Install flashings on chimneys penetrating roofs, as indicated.

.5 Install rain caps and cleanouts, as indicated.

3.2 INSTALLATION OF FLUE GAS VENTS

.1 Provide Type BH vents for condensing appliances. Vent shall be rated for anticipated flue gas temperatures.

.2 Route venting using shortest route possible to a suitable rooftop terminate locations, slope piping for positive drainage to drain.

.3 Confirm flue gas diameter and arrangement prior to ordering.

.4 Secure venting by means of support hardware supplied with the vents and conforming to flue diameter. Support chimney at bottom, roof and intermediate levels. Install guy wires as necessary.

.5 Provide expansion compensators as directed by manufacture.

.6 Provide all required accessories including insulated thimbles at building wall penetrations, barometrics dampers, cleanouts, fire stops and expansion joints. Do not modify any component in the listed system.

END OF SECTION

Part 1 General

1.1 RELATED REQUIREMENTS

.1 This Section of the specification forms part of the Contract Documents and is to be read, interpreted and coordinated with all other parts.

1.2 REFERENCE STANDARDS

.1 All referenced standards shall be to the most recent edition.

.2 American Society of Heating, Refrigeration and Air-Conditioning Engineers (ASHRAE)

.1 ASHRAE 84 , Method of Testing Air-to-Air Heat/Energy Exchangers (ANSI approved).

.2 ASHRAE 90.1 – Energy Standard of Buildings Except Low rise Residential Buildings

.3 Air Movement and Control Association (AMCA)

.1 AMCA 99 – Standard Handbooks

.2 AMCA 210 – Laboratory Methods of Testing Fans for Rating Purposes

.3 AMCA 300 – Test Code for Sound Rating Air Moving Devices

.4 AMCA 301 – Method of Publishing Sound Ratings for Air Moving Devices

.5 AMCA 500 – Test Methods for Louver, Dampers and Shutters

.4 Air Conditioning, Heating and Refrigeration Institute (AHRI)

.1 ANSI/AHRI 260 - Sound Rating of Ducted air Moving and Conditioning Equipment

.2 ANSI/AHRI 410 – Forced-Circulation Air-Cooling and Air-Heating Coils

.3 ANSI/AHRI 430 – Standard for Central Station Air-Handling Units

.5 National Fire Protection Association (NFPA)

.1 NFPA 90A – Standard for the Installation of Air-Conditioning and Ventilating Systems.

.6 Sheet Metal and Air Conditioning Contractors' National Association (SMACNA)

.1 SMACNA - HVAC Duct Construction Standards - Metal and Flexible.

1.3 ACTION AND INFORMATIONAL SUBMITTALS

.1 Submit in accordance with Section 01 33 00- Submittal Procedures .

.2 Product Data:

.1 Submit manufacturer's instructions, printed product literature and data sheets for energy recovery equipment and include product characteristics, performance criteria, physical size, finish and limitations.

.3 Shop Drawings:

.1 Drawings to indicate project layout and dimensions; indicate:

.1 General Data:

.1 Manufacturer

.2 Certifications and Listing

.3 Unit Dimensions (Length Width, Height)

.4 Arrangement

.5 Weight (kg)

.2 Filters;

.1 Manufacturer

.2 Type

.3 Efficiency

.4 Quantity

.3 Fan Sound Power Data (at minimum and maximum airflow)

.1 At AHU Inlet/Outlet (1st – 8th Octave)

.2 Radiated

.3 Include attenuation values as indicated

.4 Fan Performance Data

.1 Motor Horsepower and BHP

.2 Motor efficiency at minimum airflow and design

.3 Motor manufacturer

.4 Motor Sound Power Data (dBa)

.5 Motor Electrical Requirements (V/ph/Hz)

.6 Fan Curve at min and max speed

.7 Drive configuration

.8 Vibration Isolation

.9 CFM and Static pressure (total and external)

.10 VSDC performance data, approvals, connection points and circuit diagrams.

.5 Unit mounting arrangement and Vibration isolation

.6 Section Breaks

.7 Damper sections

.8 Control schematics and wiring diagrams

.1 Factory wiring diagram

.2 Field wiring diagram

.3 Control board schematics and control points

.

1.4 QUALITY ASSURANCE

.1 Unit and major components shall be product of the same manufacturer.

.2 Unit shall be factory built and shall carry all necessary approvals. Coils shall be tested and certified to AHRI. Fan shall be run and tested to performance. Test results shall be submitted with vibration and airflow performance.

.3 Manufacturers shall provide construction methods to achieve sound data as specified and provide data obtained by with AHRI lab data or testing of actual unit. All data shall be in measured and provided in accordance with AHRI Standards.

Part 2 Products

2.1 DUAL CORE, REVERSE FLOW, HEAT RECOVERY UNIT

.1 General

.1 Configuration: Fabricate as detailed on drawings.

.2 Performance: as indicated in equipment schedules

.2 Unit Construction:

.1 Fabricate unit with extruded aluminum channel posts and galvanized panels secured with mechanical fasteners. All access doors shall be sealed with permanently applied bulb-type gasket.

.2 Panels and access doors shall be constructed as a 1-inch (25-mm) nominal thick with injected polyurethane foam insulation. R value shall be 6.5 per inch of wall thickness. The outer panel shall be constructed of G90 galvanized steel. The inner liner shall be constructed of G90 galvanized steel. Manufacturer shall supply test data demonstrating less than L/240 deflection for an unsupported 48x48 panel under 30” W.C pressure. Units that cannot demonstrate this deflection are unacceptable.

.3 Access Doors shall be flush mounted to cabinetry, with minimum of two hinges, locking latch and full-size handle assembly.

.3 Supply and Return Fans;

.1 Provide direct-drive plenum fan(s) with ECM motors. Fan assemblies including fan, motor and sheaves shall be dynamically balanced by the manufacturer on all three planes and at all bearing supports. Manufacturer must ensure maximum fan RPM is below the first critical speed.

.2 Fan and motor shall be mounted internally on a steel base. Provide access to motor, drive, and bearings through hinged access door. Fan and motor assembly shall be mounted on rubber-in-shear vibration type isolators inside cabinetry.

.4 Electrical

.1 To the requirements of Div. 26.

.2 All electrical components shall bear a UL and CSA safety listing.

.3 Wiring Termination: Provide terminal lugs to match branch circuit conductor quantities, sizes, and materials indicated. All wires shall be number tagged and cross-referenced to the wiring diagram for ease of troubleshooting.

.4 Controls must include Self Diagnostics and PLC error code. On board fault detection and diagnostics that senses and alerts when the damper is not operating correctly.

.5 Air handler manufacturer shall provide and mount a damper controls for standalone operation of the ERV.

.5 Particulate Filters:

.1 Filter section with filter racks and guides with hinged access doors for side loading and removal of filters.

.2 Filter media shall be UL 900 listed, Class I or Class II.

.3 Flat arrangement with 50mm deep pleated MERV 10 panel filters.

.6 Energy Recovery

.1 Unit shall be equipped with Dual Core energy recovery technology. The unit shall be 90% efficient (sensible +-5%) at equal airflow in winter and up to 80% sensible in summer. It shall also provide up to 70% latent recovery. Unit shall accomplish this recovery without a defrost cycle that will reduce the effectiveness of the device. Devices employing defrost cycles that bypass the energy recovery device, or reduce the effectiveness are not acceptable. Energy recovery device shall not require frost protection in applications down to -40 degrees.

.2 Energy Cores shall be comprised of precisely corrugated 0.7mm thick 1100 Series aluminum. Thinner aluminum is unacceptable to prevent deformation should cleaning be required to maintain indoor air quality. Spacing between plates shall be minimum 9 mm to assure that frost growth will not restrict airflow or reduce performance. Heat exchangers shall be a minimum or 995 mm long to assure minimum 60 second dwell time. Time between switchovers shall be minimum 60 seconds. Technologies employing shorter heat exchangers are not acceptable due to high cross leakage, and excessive cycling. Maximum allowable face velocity across heat exchangers shall be 490 fpm. Heat exchanger face velocities exceeding 490 fpm are not acceptable.

.3 Heat exchangers shall be sectioned for a maximum section weight of 40 kg (88 lbs) so that the heat exchangers can be easily removed for cleaning to maintain indoor air quality. Sections weighing more are not acceptable. Heat exchanger that require special equipment to remove for cleaning (cranes, hoist etc.) are not acceptable. Heat exchangers shall be durable enough to handle high pressure power washing without deformation.

.4 Switchover damper section shall be comprised of multi section low leakage dampers operated by fast acting electric actuators. Pneumatic actuators are not acceptable. Damper switching times of 0.75 seconds. Dampers that do not

switch within the specified times without objectionable noise are not acceptable.

.5 Dampers shall also be capable of orienting to allow 100% recirculation of air without using heat recovery device for off peak or unoccupied heating modes. Units incapable of these operations without extra ductwork are not acceptable. Re-circ design must be capable of pre-warming both heat exchangers simultaneously for morning warm-up cycle. Strategies that only warm one heat exchanger is unacceptable.

.6 Damper seals shall be ½" heavy thickness EPDM bulb seal. Single blade seals are unacceptable due to high leakage and poor sealing.

.7 Damper bearings shall be heavy duty greasable pillow block flange bearings. Bronze or plastic bearings are not acceptable due to high cycle requirements. Bearings shall have a minimum diameter:

.8 800-7000 CFM: ¾" Bearings, maximum of 4 shafts per unit

.9 Damper manufacturer must provide written documentation that the dampers are capable of a minimum duty cycle of 500,000 cycles annually. Damper Manufacturer shall provide a written warranty on damper manufactures letterhead confirming the warranty.

.10 Recovery cycles shall be controlled by internal programmed thermostats measuring both supply and exhaust air and optimizing performance of both heat recovery and free cooling modes.

.7 External Shut-off and VAV Dampers:

.1 External Damper Leakage: Leakage rate shall be less than two tenths of one percent leakage at 2 inches static pressure differential. Leakage rate tested in accordance with AMCA Standard 500.

.2 External Shut-off dampers shall be located on outer face of heat exchangers to retain energy when unit is shut down. Dampers located on warm (inner) side of heat exchangers are not acceptable.

.8 Variable Speed Drive Controllers

.1 Variable speed motor drives controllers have been specified to be provided as part of the energy recovery ventilator units to be supplied by Div. 23, wired and connected by Div. 26.

.2 Minimum Requirements:

.1 Units to operate with an input, line side power factor of 0.94 or better at all speeds and loads.

.2 All units supplied to the project must be of the same manufacturer and model type.

.3 All units to be Factory CSA certified.

.4 Units to be rated for operation in ambient temperatures ranging from -40°C to 40©C where located outside the building envelope or heated enclosure. Rating to 0°C are acceptable inside regularly heated areas.

.5 Unit to operate at full load with a variation of -15% to +10% building voltage.

.6 Suitable for use with specified motors.

.7 Transformers shall not be used on either the input or output of the unit.

.8 The VSDC shall have a adjustable PWM carrier/switching frequency from nominal 1-12 kHz. Units unable to adjust to a minimum upper level of 12kHz are not acceptable. Maximum switching frequency of 16kHz.

.9 The VSDC shall include reactors or LRC filters as necessary to protect the motor from PWM-IGBT voltage spikes and limit the voltage rise times and maximum peak voltages throughout the specified building voltage range and for all operating conditions at the related motor connections as follows:

.1 Maximum peak voltage: 1000V

.2 Maximum voltage rate of rise: 500V/ms

.10 Unit shall be provided with protection against:

.1 Stalls caused by over current

.2 Stalls caused by overvoltage

.3 Over current protection

.4 Regenerative overvoltage protection

.5 Thermal Overload

.6 Instantaneous power failure

.7 Ground fault

.8 Alarm against overload

.9 Over temperature of heat sink

.10 Input power under voltage, over voltage and phase loss.

.11 DC bus over voltage

.11 The unit shall have the following features

.1 Adjustable acceleration and deceleration. A ramp up time from 0 RPM to 1800 RPM in 30 sec shall be the minimum possible ramp up time.

.2 Dynamic breaking for acceleration and stopping

.3 Critical speed avoidance will allow for the selection of two skip speeds and a rejection band of 0-10Hz around each speed.

.4 Voltage/frequency ratio and adjustment

.5 Power failure restart to be selectable and programmable for number of attempt’s and time interval between attempts. Unit also to have circuits to permit a start into a rotating motor, in either direction without trip or failure.

.6 Frequency range output 2-60 Hz minimum.

.7 Frequency resolution of 0.5Hz or better

.8 Frequency accuracy of +/- 0.5% to 25C

.9 Able to acceptable 4-30mA, 0 to 5 vdc or 0 to 10 vdc external control signal for speed control.

.10 Minimum of 3 programmable preset speeds to facilitate operation of the unit from interlocks at fixed speeds.

.12 Provide EMI filters to reduce EMI to FCC acceptance levels/

.13 Units to have the following components:

.1 Run and stop selector switch

.2 Hand-off –auto selector switch

.3 Manual speed adjusting potentiometer

.4 Fused disconnect switch rated for the full connected load and complete with lockable, through door operator, defeatable with screw driver. Fuses to be suitable semi-conductor rated.

.5 Trip relay with light

.6 Run relay with light

.7 Analogue speed indicator, 0-110%, 50mm bezel minimum.

.8 110V control transformer, fused in the primary and secondary

.9 Auto reset thermal overload, relay interlocked in run circuit

.10 Terminal strip to accept NC safety contacts such as freeze stat and smoke alarms to safely shut down VSDC when in hand or auto position.

.11 Form C contacts to indicate run mode

.12 Form C contacts to indicate fault or alarm mode

.13 0-10V output signal directly proportional to controller speed.

.14 Integral factory wired and mounted bypass provisions, where scheduled, such that the controlled motors can be manually put into operation bypassing the VSDC. Bypass to consist of a motor contactor and overload relay rated for the connected load. The bypass must have its own isolating device to allow for corrective work on the VSDC whiles operating in the bypass mode. Bypass and VSDC must be fully interlocked to prevent both outputs being enabled simultaneously. Control of the bypass will be by means of an enclosure door mounted VSDC bypass selector and start/stop pushbuttons with dedicated lamps to indicated operating mode.

.15 Units to be equipped with a 5% line reactor and harmonic filter on the power input side to prevent the backfeeding of harmonics into the power system.

.9 Acceptable Products: TempEff RGSP

Part 3 Execution

3.1 INSTALLATION

.1 Install in accordance with manufacturers recommendations.

.2 Support independently of adjacent ductwork with flexible connections.

.3 Install access doors in accordance with Section 23 33 00- Air Duct Accessories for access to coils, dampers, and controls equipment.

.4 Maintain clearances around unit to permit performance of maintenance, servicing, coil removal and repair.

.5 Pipe any condensate or drainage to suitable drain location.

.6 Seismically secure all units to as directed by Seismic Consultant.

.7 Locate all intakes and exhaust locations with sufficient clearance as to not cause a recirculation condition and in accordance with the National Building Code. Terminations shall be clear of obstructions and above the expected snow level.

.8 Do not operate unit for any purpose until ductwork is cleaned and filters are in place.

.9 Contractor shall furnish and maintain filter media in each air handling unit. Filters to be replaced with new filter products provided by manufacturer prior to final acceptance by owner.

.10 Manufacturer shall review installation requirements and verify opening dimensions and installation methods to ensure components can be installed into the designated space with uncompromised performance.

.11 Submit manufacturer's start-up reports prior to start TAB.

3.2 FIELD QUALITY CONTROL

.1 Heat Recovery Units:

.1 Set face and bypass dampers so face dampers are fully open and bypass dampers are fully closed.

.2 Check for smooth, vibration less correct rotation of supply fan impeller.

.3 Measure supply fan capacity.

.4 Adjust blower speed as necessary and repeat measurement of fan capacity.

.5 Measure exhaust fan capacity.

.6 Adjust blower speed as necessary and repeat measurement of fan capacity.

.7 Measure pressure drop each component of air handling unit.

.8 Set outside air and return air dampers for the percentage of outside air required by design and repeat measurements of fan capacity.

.9 Measure flow rates (minimum and maximum) of SA, E/A.

.10 Confirm operation of VAV dampers and switch over setpoints. Adjust a necessary to achieve design performance.

.11 Measure radiated and discharge sound power levels under maximum airflow.

.12 Verify operating control strategies, including:

.1 Early morning warm-up cycle.

.2 Pre-cooling.

.3 Freeze protection.

.4 Core Damper cycle operation, temperature of change-over to free cooling.

.5 Alarms.

.6 Voltage drop across control wiring.

.7 Operation of remote panel including pilot lights, failure modes.

.8 Heating coil performance and control under varying flow conditions.

.13 Check capacity of heating coil.

.14 Refer to other sections of these specifications for PV procedures for other components.

.2 Verify accessibility, serviceability of components including motorized dampers, filters coils, fans, motors, operators, humidifiers, sensors, electrical disconnects.

.3 Verify accessibility, clean ability, drainage of drain pans for coils, humidifiers.

END OF SECTION

Part 1 General

1.1 RELATED REQUIREMENTS

.1 This Section of the specification forms part of the Contract Documents and is to be read, interpreted and coordinated with all other parts.

1.2 REFERENCE STANDARDS

.1 American National Standards Institute/Air-Conditioning and Refrigeration Institute (ANSI/ARI)

.1 ANSI/ARI 210/240, Unitary Air Conditioning and Air-Source Heat Pump Equipment.

.2 American National Standards Institute/American Society of Heating, Refrigeration and Air-Conditioning Engineers (ANSI/ASHRAE)

.1 ANSI/ASHRAE Standard 15 , Safety Standard for Refrigeration Systems.

.3 Air-Conditioning and Refrigeration Institute (ARI)

.1 ARI 320, Standard for Water-Source Heat Pumps.

.2 ARI 325 , Standard for Ground Water - Source Heat Pumps.

.4 CSA Group (CSA)

.1 CAN/CSA-C656, Performance Standard for Split-System and Single Package Central Air Conditioners and Heat Pumps.

.2 CAN/CSA-C13256, Water-Source Heat Pumps-Testing and Rating for Performance, Part 1 Water-to-Air and Brine-to-Air Heat Pumps.

.5 Environment Canada, (EC) / Environmental Protection Services (EPS)

.1 EPS 1/RA/2-, Code of Practice for Elimination of Fluorocarbons Emissions from Refrigeration and Air Conditioning Systems.

.2 Environment Canada, Ozone-Depleting Substances Alternatives and Suppliers List.

1.3 ACTION AND INFORMATIONAL SUBMITTALS

.1 Submit in accordance with Section 01 33 00- Submittal Procedures .

.2 Product Data:

.1 Submit manufacturer's instructions, printed product literature and data sheets for heat pumps and include product characteristics, performance criteria, physical size, finish and limitations.

1.4 DELIVERY, STORAGE AND HANDLING

.1 Deliver, store and handle materials in accordance with Section with manufacturer's written instructions .

.2 Delivery and Acceptance Requirements: deliver materials to site in original factory packaging, labelled with manufacturer's name and address.

.3 Storage and Handling Requirements:

.1 Store materials in a dry location and in accordance with manufacturer's recommendations in clean, dry, well-ventilated area.

Part 2 Products

2.1 REFRIGERANTS

.1 Type of Refrigerant: R-410a

2.2 DRAIN PANS

.1 Design and construct condensate drain pans under indoor coils so that no water can accumulate and install to allow for easy cleaning. Pipe to nearest drain.

2.3 PACKAGED AIR SOURCE HEAT PUMP

.1 Performance data: as indicated .

.2 Outdoor unit:

.1 Units shall be equipped with multiple circuit boards that interface to the M-NET controls system and shall perform all functions necessary for operation. The outdoor unit shall be completely factory assembled, piped and wired. Each unit shall be run tested at the factory.

.2 The sum of connected capacity of all indoor units shall range from 50% to 130% of outdoor rated capacity.

.3 Outdoor unit shall have a sound rating no higher than 59 dB(A).

.4 Both refrigerant lines from the outdoor unit to indoor units shall be individually insulated.

.5 The outdoor unit shall have an accumulator with refrigerant level sensors and controls.

.6 The outdoor unit shall have a high pressure safety switch, low pressure safety switch and over-current protection and DC bus protection.

.7 The outdoor unit shall have a high efficiency oil separator plus additional logic controls to ensure adequate oil volume in the compressor is maintained.

.8 Unit Cabinet:

.1 The casing shall be fabricated of galvanized steel, bonderized and finished with a powder coated baked enamel.

.9 Fan:

.1 The unit shall be furnished with two direct drive, variable speed motors.

.2 The fans will be forward curved type blades for quiet operation.

.3 The fan motor shall have inherent protection, have permanently lubricated bearings, and be completely variable speed.

.4 The fan motor shall be mounted for quiet operation.

.5 The fan shall be provided with a raised guard to prevent contact with moving parts.

.6 The outdoor unit shall have horizontal discharge airflow.

.10 Refrigerant

.1 R410A refrigerant shall be required for all S-Series outdoor unit systems.

.11 Coil:

.1 The outdoor coil shall be of nonferrous construction with lanced or corrugated fins on copper tubing.

.2 The coil fins will have a factory applied corrosion resistant blue-fin finish.

.3 The coil shall be protected with an integral metal guard.

.4 Refrigerant flow from the outdoor unit shall be controlled by means of an inverter driven compressor.

.12 Compressor:

.1 The compressor shall be a single high performance, inverter driven, modulating capacity scroll compressor.

.2 The outdoor unit compressor shall have an inverter to modulate capacity. The capacity shall be completely variable down to 41% of rated capacity.

.3 The compressor shall be equipped with an internal thermal overload.

.4 The compressor shall be mounted to avoid the transmission of vibration.

.13 Electrical:

.1 The outdoor unit electrical power shall be 208/230 volts, 1-phase, 60 hertz.

.2 The unit shall be capable of satisfactory operation within voltage limitations of 187-228 volts (208V/60Hz) or 207-253 volts (230V/60Hz)

.3 The outdoor unit shall be controlled by integral microprocessors.

.4 The control circuit between the indoor units and the outdoor unit shall be 24VDC completed using a 2-conductor, twisted pair, non-polar shielded cable to provide total integration of the system.

.3 Indoor unit:

.1 The indoor unit shall be factory assembled, wired and run tested. Contained within the unit shall be all factory wiring, piping, electronic modulating linear expansion device, control circuit board and fan motor. The unit shall have a self-diagnostic function, 3-minute time delay mechanism, an auto restart function, and a test run switch. Indoor unit and refrigerant pipes shall be charged with dehydrated air before shipment from the factory.

.2 Unit Cabinet:

.1 All casings, regardless of model size, shall have the same white finish

.2 Multi directional drain and refrigerant piping offering four (4) directions for refrigerant piping and two (2) directions for draining shall be standard.

.3 There shall be a separate back plate which secures the unit firmly to the wall.

.3 Fan:

.1 The indoor fan shall be an assembly with one or two line-flow fan(s) direct driven by a single motor.

.2 The indoor fan shall be statically and dynamically balanced to run on a motor with permanently lubricated bearings.

.3 A manual adjustable guide vane shall be provided with the ability to change the airflow from side to side (left to right).

.4 A motorized air sweep louver shall provide an automatic change in airflow by directing the air up and down to provide uniform air distribution.

.4 Filter:

.1 Return air shall be filtered by means of an easily removable, washable filter.

.5 Coil:

.1 The indoor coil shall be of nonferrous construction with smooth plate fins on copper tubing.

.2 The tubing shall have inner grooves for high efficiency heat exchange.

.3 All tube joints shall be brazed with phos-copper or silver alloy.

.4 The coils shall be pressure tested at the factory.

.5 A condensate pan and drain shall be provided under the coil.

.6 Both refrigerant lines shall be insulated in accordance with the installation manual.

.6 Electrical:

.1 The unit electrical power shall be 208/230 volts, 1-phase, 60 hertz.

.2 The system shall be capable of satisfactory operation within voltage limits of 187-228 volts (208V/60Hz) or 207-253 volts (230V/60Hz)

.7 Controls:

.1 This unit shall use controls provided by manufacturer to perform functions necessary to operate the system. The unit shall be able to control external backup heat.

.2 Indoor unit shall compensate for the higher temperature sensed by the return air sensor compared to the temperature at level of the occupant when in HEAT mode. Disabling of compensation shall be possible for individual units to accommodate instances when compensation is not required.

.3 Control board shall include contacts for control of external heat source. External heat may be energized as second stage with 1.8°F – 9.0°F adjustable deadband from set point.

.4 Indoor unit shall include no less than four (4) digital inputs capable of being used for customizable control strategies.

.5 Indoor unit shall include no less than three (3) digital outputs capable of being used for customizable control strategies.

.4 Refrigeration piping:

.1 Between compressor, outdoor coil and indoor coil, complete with refrigerant metering devices and valves.

.2 Refer to Section 23 23 00

.5 Accessories:

.1 Indoor heating/cooling thermostats and controllers.

.2 Twinning Kit

.6 Acceptable Products: Mitsubishi Electric.

Part 3 Execution

3.1 INSTALLATION

.1 Install where indicated and in accordance with manufacturer's instructions.

.2 Install outdoor units at ground level on housekeeping pad c/w with elevated stand.

.3 Secure with hold-down bolts in accordance with manufacturer's recommendations.

.4 Make piping connections as per Section 23 23 00.

.5 Mount indoor unit as indicated. Adjust air flow pattern to achieve optimal coverage of the area.

.6 Ensure installation is accessible with service clearance clear of obstructions that may prevent access to components or to prevent removal of components for servicing.

3.2 DRAIN PANS

.1 Install so that no water can accumulate. Arrange easy access for cleaning.

.2 Include internal or external trap for proper draining.

3.3 START-UP AND COMMISSIONING

.1 Submit written start-up reports to Departmental Representative and include reports in O&M.

.2 Start-up to be in accordance with manufactures check list and start-up forms.

.3 Correct any deficiencies discovered during start-up. Adjust as required.

.4 Work with Controls Contractor to configure and adjust controls.

3.4 PROTECTION

.1 Protect installed products and components from damage during construction.

.2 Repair damage to adjacent materials caused by heat pumps installation.

END OF SECTION

Part 1 General

1.1 RELATED REQUIREMENTS

.1 This Section of the specification forms part of the Contract Documents and is to be read, interpreted and coordinated with all other parts.

1.2 REFERENCE STANDARDS

.1 All referenced standards shall be to the most recent edition.

.2 National Fire Protection Association (NFPA)

.1 NFPA 90A, Standard for the Installation of Air Conditioning and Ventilating Systems.

.2 NFPA 90B, Standard for the Installation of Warm Air Heating and Air Conditioning Systems (ANSI).

.3 Underwriters' Laboratories (UL) Inc.

.1 UL 2021, Fixed and Location-Dedicated Electric Room Heaters.

1.3 ACTION AND INFORMATIONAL SUBMITTALS

.1 Submit in accordance with Section 01 33 00- Submittal Procedures .

.2 Product Data:

.1 Submit manufacturer's instructions, printed product literature and data sheets for unit heaters and include product characteristics, performance criteria, physical size, finish and limitations.

.3 Shop Drawings:

.1 Indicate on drawings:

.1 Equipment, capacity and piping connections.

.2 Dimensions, internal and external construction details, recommended method of installation with proposed structural steel support, sizes and location of mounting bolt holes.

Part 2 Products

2.1 GAS FIRED UNIT HEATERS

.1 Unit heater to be

.1 Propane Gas fired,

.2 High efficiency, minimum 93% thermal efficiency

.3 Separated combustion with dedicated flue and combustion air ducting.

.4 CSA/ETL listed for use in Canada

.2 Capacity as indicated on drawings.

.1 Minimum 25C temp rise

.3 Power supply: 120V/1/60, transformer for low voltage controls.

.1 Provide low voltage thermostat with unit heater.

.4 ½" NPT gas connection, conversion kit as required for use with propane.

.5 Cabinet:

.1 4-point suspension,

.2 Vibration isolation on cabinet, venter fan and fan motor

.3 Sealed construction

.4 External terminal strip,

.5 All door panels to be gasketted with safety door switch

.6 Fan guard.

.6 Heat Exchanger

.1 Single burner combustion system with one piece burner,

.2 Single stage gas valve,

.3 Multi-try direct spark ignition with timed lockout,

.4 Pressure switch for vent flow

.5 Venter motor and wheel,

.6 High limit temperature control,

.7 LED indication with on board diagnositics

.7 Venting

.1 Compatible with Venting specified under Section 23 51 00.

.2 Include Horizontal Vent Kit and adaptor

.8 Acceptable Products: Reznor, Sterling

Part 3 Execution

3.1 INSTALLATION

.1 Install in accordance with manufacturer's instructions.

.2 Include double swing pipe joints as indicated.

.3 Provide supplementary suspension steel as required.

.4 Install thermostats in locations indicated.

.5 Before acceptance, set discharge patterns and fan speeds to suit requirements.

.6 Mount at height indicated on plans, coordinate with adjacent services and obstructions.

.7 Orient heater for full coverage and flow across area. Adjust louvers as required.

.8 Start-up and adjust as required by manufacturer, record all values and include in O&M.

.9 Support unit heater as directed Seismic Engineer. Provide isolation and restraint as required to adequately support equipment without placing excessive loads or transmitting vibration to structure

3.2 PROTECTION

.1 Protect installed products and components from damage during construction.

.2 Repair damage to adjacent materials caused by unit heaters installation.

END OF SECTION

1.1 GENERAL

.1 This section includes general clauses applicable to the supply and installation of all electrical systems. It is intended to supplement the requirements of Division 01.

.2 The Contractor shall provide all labour, materials, tools and equipment required for the work, except such materials and/or equipment that is specified as supplied by Owner.

.3 It is the intent of the Drawings and Specifications to provide a complete and workable installation. Any work, fitting and/or necessary material not specifically mentioned or shown on the drawings, but obviously necessary to complete the installation, shall be furnished by the Contractor as if specifically mentioned herein and detailed.

1.2 SITE VISIT

.1 The bidding Contractors are encouraged to visit the site prior to construction to examine closely any local and existing conditions which may affect the performance of the work.

.2 Arrangements for site visits are to be made with the Project Manager.

.3 The bidding Contractors are expected to examine the existing site in detail to determine the specific work required to complete the contract.

1.3 SCOPE OF WORK

.1 Installation of electrical systems for the new ECCC Enforcement Garage in Whitehorse, Yukon.

.2 Work includes installation of a new exit/emergency lighting, service entrance, power and lighting systems for the entire building.

1.4 DRAWINGS AND SPECIFICATIONS

.1 The drawings and specifications are complementary each to the other and what is called for by one shall be binding as if called for by both.

.2 Should any discrepancy appear between the drawings and specifications or within the drawings or the specifications themselves, which leaves the Contractor in doubt as to the true intent and meaning of the drawings and specifications, a ruling shall be obtained from the Departmental Representative.

.3 Electrical drawings indicate general location and Specifications route to be followed by 'system wiring' which includes; conduits, cables, cable trays and wiring, and do not show all architectural, structural, mechanical and landscape details. In some cases, system wiring is not shown on drawings or is shown diagrammatically in schematic or riser diagrams. The Contractor shall provide system wiring to form a complete operating job. System wiring shall be physically installed to conserve headroom, furring spaces, and to coordinate with all trades and equipment provided.

.4 Follow architectural, structural and mechanical drawings for details of work and install electrical systems to coordinate with architectural, structural and mechanical work and details. Refer to architectural and structural drawings for accurate building dimensions.

.5 Examine structural, architectural and mechanical drawings and work of all other trades to ensure that work can be satisfactorily carried out without changes to building as shown on the drawings. Conflicts or additional work beyond the work covered by drawings and specifications shall to be brought to attention of the Departmental Representative by the Contractor.

1.5 INSTALLATION

.1 The Contractor shall be responsible for prompt installation of his work in advance of concrete pouring, application of architectural finish or similar work.

.2 Division 26 is responsible for all work specified as Division 26 in specification Sections 23 09 33 "Electric and Electronic Control System for HVAC".

.3 Where interlocks are required for mechanical systems, Division 26 shall install Division 23 supplied relays and cabinets, and provide all line voltage wiring and terminations. Division 26 to coordinate with Division 23.

.4 Division 25 hand off Auto switches.

.5 Division 25 Trap primer.

1.6 RESPONSIBILITY OF CONTRACTOR

.1 Promptly advise the Departmental Representative of any specified equipment, material or installation of same which appears inadequate or unsuitable, in violation of laws, ordinances, rules or regulations of authorities having jurisdiction, or of any necessary items of work omitted from the Contract Documents.

.2 During the course of construction, existing conditions which are found to deviate from those indicated on the drawing are to be brought to the attention of the Departmental Representative.

1.7 WORK SCHEDULE

.1 Follow specific requirements outlined in Division 01 regarding work schedule, job completion, and the timing of work.

1.8 COORDINATION WITH TRADES

.1 In conjunction with the General Contractor and all trades, prepare electrical coordination drawings to determine and coordinate efficient use of available space, proper sequencing of work, and protection of installed work, in order to resolve installations conflicts.

.2 Electrical coordination drawings are to be available on-site for use by; the General Contractor and all trades, and shall be available for Departmental Representative's review during all site inspections.

.3 Maintain electrical coordination drawings throughout the construction period. Record changes due to modifications and adjustments.

.4 Coordination plans shall be made available to the Departmental Representative at the Departmental Representative's request; copy of drawings to be delivered to the Departmental Representative's office within 3 working days of the Departmental Representative's written request to the Contractor.

.5 Departmental Representative's review of coordination drawings is for general implementation design only and does not relieve the Contractor from complying with all requirements of drawings and specifications including coordination with the General Contractor and with all trades.

1.9 VOLTAGE RATINGS

.1 Operating voltages: To CAN3-C235, latest edition.

.2 Motors, electric heating, control and distribution devices and equipment to operate satisfactorily at 60 Hz within normal operating limits established by above standard. Equipment to operate in extreme operating conditions established in above standard without damage to equipment.

1.10 CODES AND STANDARDS

.1 Do complete installation in accordance with CSA C22.1 - 2009 except where specified otherwise.

.2 Comply with all CSA electrical bulletins as well as all local rulings in force at the time of tender.

.3 Where reference is made to published standards the latest editions and revisions of such standards shall apply.

.4 Notify Departmental Representative of changes required by the Electrical Inspection Department prior to making changes.

1.11 PERMITS AND FEES

.1 Submit to; the Electrical Inspection Department, the Supply Authorities and the Building Inspection Authorities, the necessary number of drawings and specifications, for examination and approval prior to commencement of work.

.2 Pay all fees and coordinate inspections required by the Authorities Having Jurisdiction (AHJ) for work provided by this division.

.3 Furnish certificates of acceptance from each AHJ inspection department upon completion of work.

.4 Notify the Departmental Representative of changes required by the AHJ Department(s) prior to making changes. Changes required by the AHJ shall be implemented by the Contractor only after written instruction by the Departmental Representative.

1.12 CARE, OPERATION AND START UP

.1 Instruct operating personnel in the operation, care and maintenance of equipment as specified in further sections.

.2 Provide specific training requirements as specified in further sections.

1.13 MATERIALS AND EQUIPMENT

.1 Equipment and materials to be new and carry acceptable agency approval markings.

.2 Factory assembled control panels and component assemblies.

.3 All work to be executed in a neat and workmanlike manner by qualified tradesmen. Division 26 to keep a competent foreman and all necessary assistants, to the approval of the Departmental Representative and to the approval of the AHJ(s), on the job during the work.

.4 All electrical equipment to be CSA or Canadian equivalent Canadian standards approved. Electrical equipment that is shown on the drawings or called for in the specifications that is not CSA or equivalent approved is to be treated by the requirements of Division 26 requirements in one of the following ways:

.1 make allowance in Contract Price to have the equipment CSA or equivalent approved, or

.2 make allowance in Contract Price for the most expensive CSA or equivalent approved equivalent.

.5 Unless otherwise specifically called for in the specifications, uniformity of manufacturer to be maintained throughout the building for any particular item or type of equipment.

.6 The Contractor shall be completely responsible for ascertaining that every item included in Contract complies in all respects with specifications and drawings. Any item of equipment found by Departmental Representative not to comply with specifications and drawings to be replaced at no additional cost with an item or unit of the Departmental Representative's choice.

1.14 RECORD (AS-BUILT) DRAWINGS

.1 Reference and follow directions of section 01 77 00; "Closeout Procedures".

.2 Neatly record, as the job progresses, day by day, all work as installed. Make these drawings available to the Departmental Representative for inspection and review from time to time as the Departmental Representative sees fit. As-built drawings must be available on-site during all Departmental Representative's inspections.

.3 Record all changes to contracted work as issued by addendum, site instruction, and change order.

.4 Record all system's installations on record drawings. Include:

.1 panel and circuit numbers,
.2 Feeder wiring details including; location, conductor gauge, cable assembly and conductor termination details. Required for all panel feeders, MCC units, CDP(s) and service entrances.

.3 conduit and cable tray details including; location, trade size.
.4 boxes, cabinets and consolidation points including; physical dimensions, NEMA type and seismic restraint,
.5 equipment; location, name plate data, overload protection location and trip settings, seismic restraint,
.6 all other details required to document the provided systems for use by the owner

.5 Record the location of all electrical equipment; Equipment designation to correspond to field label of equipment. Show connected circuit and panel identification.

.6 Record wiring logic diagrams and include written commentary for logic operation.

.7 Deliver marked up plans to the Departmental Representative

1.15 SHOP DRAWINGS AND OPERATING INSTRUCTIONS

.1 Submit electronic shop drawings for all equipment and required details including the following:

.1 Electrical Permit
.2 Seismic Restraint and Housekeeping Pads
.3 Service Entrance Equipment
.4 Distribution Equipment
.5 Disconnect Switches
.6 Lighting System and control
.7 Exit and Emergency Lighting including Mounting Details
.8 Heating Cables and Control
.9 Fire Retardant Compound
.10 Where applicable system riser diagram/ wiring diagram to be provided.
.11 Equipment and materials as required in further sections of the specifications.

.2 Prior to submission, all shop drawings shall be stamped, dated and signed by the Division 26 Contractor and the General Contractor.

.3 Division 26 to review shop drawings and assume responsibility for:
.1 Completeness - including all details specified.
.2 Dimensions and field measurements.
.3 Catalogue numbers and similar data.
.4 Conformance with contract documents.
.5 Colours.
.6 Site conditions.
.7 Interference with mechanical equipment including motor sizes and loads, equipment locations and connections points.

.4 Shop drawing submissions to include:

.1 Name of Contractor
.2 Project name.
.3 All pertinent data.

.4 Dimensions. All dimensions and data to be in metric units.
.5 Weights and center of mass information, where required for seismic purposes.
.6 Colour.
.7 Specification section number.
.8 Additional equipment information as necessary to describe equipment use (example: weatherproof disconnect switch for motor #1).
.9 Contractor's and Division 26's; stamp and signature.

1.16 LOCATION OF OUTLETS

.1 Do not allow outlets back-to-back in wall; Allow minimum six inches (150 mm) horizontal clearance between boxes.

.2 Where outlets are located on counter tops and adjacent to sinks, confirm exact location of the sink with the plumbing trade prior to rough-in. If a conflict exists with the outlet inform the Departmental Representative as soon as possible to obtain a new location for the outlet(s). Switches and outlets adjacent to each other to match in elevation.

.3 Change location of outlets at no extra cost or credit, providing distance does not exceed ten feet (3050 mm) and information is given before installation.

.4 Locate light switches on latch side of doors, ensure switches are inside room. Confirm prior to rough-in. If insufficient room is left by building framing, notify the Departmental Representative for further instruction.

.5 Note, drawings indicate design intentions only. Exact locations are the responsibility of the contractor. Provide coordination with all sub-trades for exact connection locations prior to rough-in.

1.17 MAINTENANCE MATERIALS

.1 Provide maintenance materials as recommended by equipment suppliers and as specified.

.2 Provide materials as specified in Section 01 78 00 "Closeout Submittals", Section 26 05 31 "Electrical Maintenance Manual" and as specified in each following section.

1.18 MOUNTING HEIGHTS

.1 Mounting height of equipment is from finished floor to centre line of equipment unless specified or indicated otherwise.

.2 If mounting height of equipment is not indicated verify before proceeding with installations.

.3 Confirm the height of devices in handicapped facilities before installation.

.4 Install electrical equipment at the following centre heights unless indicated otherwise.
.1 Local Light Switches:
.1 General: 1050 mm unless detailed otherwise.

.2 Above top of counters or splash back: 175 mm to match outlets.

.2 Wall receptacles:

.1 General: 300 mm unless detailed otherwise.

.2 Above top of continuous baseboard: 200 mm

.3 Above top of counters or splash back: 175 mm

.4 In Mechanical Rooms: 1050 mm or as indicated on drawings.

.3 Panelboards: 1800 mm to top or as required by code.

.4 Telephone outlets: 300 mm

.5 Wall-mounted emergency lighting head:

.1 general: 2700 mm when ceiling height is 3000 mm or greater, and 300 mm below ceiling height in locations where ceiling is less than 3000 mm.

1.19 PROTECTION

.1 Protect exposed live equipment during construction for personnel safety.

.2 Shield and mark live parts eg "Live 120 Volts".

1.20 PENETRATIONS

.1 Use pre-manufactured poly pans or approved alternate for any outlet or box located in or through vapour barrier.

.2 All penetrations through vapor barrier required for any component installed by Division 26 to be preformed in accordance with specification section 07 25 00.

.3 Provide fire rating protection as required at all locations where electrical equipment penetrates fire separations.

.4 Where cables or conduits pass through floors and fire rated walls, pack space between wiring and sleeve full and seal with caulking compound conforming to ULC-S115, latest revision.

.5 Use HILTI FS-ONE Intumescent Firestop Sealant or approved equal. Provide shop drawings for fire sealant.

1.21 CLEANING

.1 Do final cleaning in accordance with section 01 74 11 "Cleaning".

.2 At time for final cleaning, clean lighting lenses, reflectors and other surfaces that have been exposed to construction dust and dirt.

1.22 MECHANICAL WIRING

.1 Provide all starters and disconnects unless otherwise specified. Include provision of all starters and disconnects for Division 23 specified equipment unless otherwise detailed or shown that provision is by another Division.

.2 Division 26 is to provide all line voltage; wiring, connections, and conduit, work for this project unless otherwise detailed or shown that provision is by another Division. Coordinate with the General Contractor and all Divisions for requirements.

.3 Supply and install all line voltage; wiring, connections, over-current devices,

disconnect switches and conduit work for all Division 23 control transformers.

.4 Division 26 to provide all line voltage; wiring, connections, over-current devices, disconnect switches, starters, over-loads, and conduit work, for all Division 23 supplied and/or installed equipment, unless specified otherwise. Refer to Division 23 specifications and drawings for Division 23 wiring requirements. Note that the Contractor shall be responsible to coordinate with Division 23 and all Divisions prior to rough-in for exact equipment electrical requirements.

.5 Wiring and connections below 50 V and which are related to the control systems specified in Division 23 and other Divisions shall remain the responsibility of that specific Division unless noted otherwise as to be provided by Division 26. Provide all line voltage control system interlocks for Division 23 where specified and/or shown on the drawings.

.6 Final connections to mechanical equipment is to be made with watertight flexible conduit with watertight connectors, except in hazardous locations where connections shall be made with teck cable and cable glands to suit the environment.

.7 All extra low voltage wiring and connections below 50 volts related to the security system shall be the responsibility of Division 26.

.8 The contractor to review Division 23

1.23 TESTS

.1 Reference Section 26 05 04 "Contractor Testing".

1.24 DEMONSTRATION AND INSTRUCTION

.1 Reference Section 27 95 01 "Demonstration and Training".

1.25 IDENTIFICATION

.1 Reference Section 26 05 25 "Identification".

1.26 ACCESSIBILITY

.1 Install so as to be readily accessible for adjustment, operation and maintenance. Provide access panels where required in building surfaces.

.2 Locate panels in service areas where possible. Do not locate in paneled or special finish walls without prior approval of the Departmental Representative and the Architect.

.3 Access panels in ULC fire separations and fire rated walls shall have a compatible fire rating and ULC label. Acquire approval in writing from the local Fire Authority and Building Official where required.

.4 Access panels shall be painted with a primer coat, if applicable and then with a finish coat, colour and type to the Departmental Representative's and Architect's approval.

1.27 INSPECTIONS

.1 The Division 26 Contractor, in coordination with the General Contractor,

GENERAL

shall request the Departmental Representative to perform site installation inspections as required by; the General Contract, as established at the pre-construction site meeting and as required to satisfy the Departmental Representative that the Division 26 work, including equipment, materials and installation is provided as specified, as shown and as required.

.2 In the absence of a firm inspection schedule the contractor is to notify the Departmental Representative in writing prior to all; boarding and wall covering, of the electrical rough-in.

.3 Notification of a required inspection is to be at least 2 days prior to actual inspection time.

.4 The Electrical contractor is to ensure that all components of the installation are accessible or furnish accessibility as required by the Departmental Representative.

1.28 SUBSTANTIAL COMPLETION INSPECTION

.1 Refer to general specifications.

.2 Prior to a substantial completion review being done, Division 26 shall submit all of the following to the Departmental Representative:

.1 A complete list of all materials pertaining to Division 26, not on-site and required to complete the project; as assessed by the Division 26 Contractor in coordination with the General Contractor.
.2 Fire Alarm Verification Report.
.3 Contractor Testing and commissioning reports.
.4 Record Drawings; complete to date of submission.
.5 O&M Manual draft; complete to date of submission.
.6 Transmittal letters indicating all spare parts, tools, etc. turned over to the Owner as specified.

.3 The following requirements in addition to the submission requirements above shall be demonstrated as operational and complete prior to granting of Substantial Completion:

.1 Emergency and Exit Lighting System
.2 Seismic Restraint Systems
.3 Other Items Effecting Life Safety and Items Effecting Fire Safety.

1.29 FINAL ACCEPTANCE INSPECTION

.1 Refer to requirements of the General Contract.

.2 Prior to the contractor requesting final acceptance, the Division 26 in coordination with the General Contractor, shall submit to the Departmental Representative the following:

.1 A written report indicating action completed to correct all Substantial Inspection deficiencies.

END OF SECTION

PART 1 - GENERAL

1.1 GENERAL INSTRUCTIONS

.1 This section of the specification forms a part of the Contract Documents and is to be read, interpreted and coordinated with all other parts.

.2 Where specified and as required, coordinate with other Division contractors to test and record, equipment and systems operation.

1.2 RELATED WORK

.1 "Common Work Results Electrical" 26 05 01

.2 "Electrical Maintenance Manuals" Section 26 05 08

.3 "Demonstration and Instruction" 26 79 00

PART 2 - PRODUCTS

2.1 SCOPE

.1 Test and check all portions of the electrical systems for correct operation.

.2 All test results shall be tabulated, signed and inserted into the Maintenance Manuals in the corelating system section's sub-section heading 'Test Results'.

.3 Specific tests and procedures outlined in this section and in the referenced sections are in addition to normal visual and mechanical inspections prior to placing equipment in service.

.4 Where required and where directed by the Departmental Representative obtain copies of factory tests for comparative results.

.5 Where directed by the Departmental Representative demonstrate field tests for equipment and system operation.

PART 3 - EXECUTION

3.1 TESTING AGENCY AND/OR PERSONNEL

.1 All testing and commissioning will be performed by the contractor's forces unless indicated otherwise.

.2 This Division is responsible for coordinating with the Departmental Representative for Departmental Representative's witness of the work detailed in this section and in the referenced sections.

.3 Provide the Departmental Representative with one journeyman; electrician or where a specialized sub-trade is required provide one specialized tradesman, as needed to gain access to equipment for testing, demonstration, removal and replacement of covers, wires and cables, etc.

.4 All deficient equipment/devices shall be replaced and retested to the approval of the Departmental Representative.

.5 All covers, access doors opened for inspection to be replaced by the Contractor.

.6 The costs for testing and test equipment will be the responsibility of the Contractor.

.7 Test forms to be provided by Owner/ Commissioning agent.

3.2 TESTING AND INSPECTION REPORTS

.1 Inspection and test results to be recorded on a suitable form which shall be furnished by the Contractor.

.2 Upon completion of the project, the Contractor shall assemble a complete set of test and inspection results and report and insert in the operation and maintenance manuals.

3.3 TEST APPARATUS EQUIPMENT AND LABOUR

.1 The Contractor to be responsible for furnishing all apparatus and labour required for the test operations.

.2 Division 26 to designate a senior experienced individual fully familiar with the project to demonstrate, test and report the electrical systems' operations.

PART 4 - SYSTEMS

4.1 GROUNDING TEST

.1 As per section 26 05 28. **Commissioning agent to perform grounding test in the presence of electrical contractor and Departmental Representative. Once accepted, test results to be included in the operation and maintenance manual by electrical contractor.**

4.2 ELECTRICAL DISTRIBUTION SYSTEM

.1 Before energizing any portion of the new electrical system, perform megger ohmmeter tests on include all distribution feeders, panelboard feeders and motor feeders.

.2 Test readings to conform to the Canadian Electrical Code. Test results to be logged, tabulated and incorporated into operating and maintenance manuals.

4.3 MECHANICAL EQUIPMENT

.1 In cooperation with the mechanical contractor, take clip-on ammeter readings and motor terminal voltage readings on all phases of all mechanical equipment motors with motors operating under normal full load conditions.

.2 Test readings shall be submitted complete with heater overload sizes, motor electrical characteristics including frame type, voltage and phase, and name plate data. Insert list in each Operation and Maintenance Manual.

.3 Confirm motor rotation direction with Division 23 (or other specific Division as required) and record motor rotational direction.

.4 Contractor to perform tests to the satisfaction of the commissioning agent

and Departmental Representative.

4.4 DEVICES

.1 Test all receptacles for proper polarity, circuitry and grounding.

.2 Provide contractors test results in Operation and Maintenance manuals. Test result form to be contractor declaration that all receptacles have been tested and are operational.

4.5 LIGHTING EQUIPMENT

.1 Test all lighting circuits and lighting fixtures as indicated following, as specified in specific equipment sections and as recommended by the equipment manufacturer(s). Include all; manual switches and accessories.

.2 Provide contractors test results in operation and maintenance manuals. Test results to include lighting circuit ampacities under full load conditions, and contractor declaration that each lighting fixture and control apparatus has been tested and is operating as specified.

4.6 EXIT AND EMERGENCY LIGHTING AND UNIT EQUIPMENT

.1 Test all emergency; lighting circuits, controls and unit battery packs as following, as specified in specific equipment sections and as recommended by the equipment manufacturer(s).

.2 Test and record each remote head voltage under full load operating conditions.

.3 Test unit equipment operation including full load voltage and as recommended by the manufacturer for equipment operation for code required rated output. Note that:

.1 general emergency lighting requirements are 30 minutes to 91% of full load voltage

4.7 HEATING CABLES AND CONTROL

.1 Test the heating cable insulation resistance; megger test. Refer to section 26 41 10 "Radiant Heating Electric Cables" for further requirements.

.2 Test the heating cables and heating cable control system as specified in the specific sections and as recommended by the equipment manufacturer(s).

4.8 ADDITIONAL TESTS AS REQUIRED BY THE DEPARTMENTAL REPRESENTATIVE

.1 Make additional system tests as directed by the Departmental Representative. Make allowance in bid price to provide an additional 8 journeyman man hours to test and document electrical systems as directed by the Departmental Representative. Include allowance in bid price to provide Contractor test results in O+M manual.

END OF SECTION

PART 1 - GENERAL

1.1 GENERAL

.1 This section covers items common to all sections of Division 26 and is to be supplemented with the requirements of the other sections.

.2 Provide operation and maintenance data in accordance with Section 01 78 00 "Closeout Submittals".

1.2 SCOPE OF WORK

.1 Provide four (4) complete sets of electrical operation and maintenance manuals to be turned over to the Owner. One additional copy for the Departmental Representative. Total 5.

.2 Documentation Agent or Contractor to submit complete system description, schematics and draft manuals by the substantial completion date. Draft manual to be submitted in temporary binder. All O&M manual material to be assembled and submitted in draft form to the Departmental Representative's office for review at the substantial completion date.

PART 2 - PRODUCTS

2.1 DOCUMENTATION AGENT

.1 Electrical operation and maintenance manuals shall be prepared by a documentation agent specializing in this type of work. Agent shall have previous experience in assembling O&M manuals as described below.

2.2 BINDERS

.1 Electrical O & M manuals to be assembled in 210 mm x 275 mm capacity, expanding spine catalogue binders complete with plated piano hinges, bound in heavy blue fabric, hot stamped white lettering on front and spine. Provide sufficient volumes to allow each binder to hold system data while in full closed position (not expanded). Provide art work and fabric colour to the Departmental Representative before having binders constructed.

2.3 BINDER COVER AND SPINE TITLES

.1 Cover title shall include "Electrical Operation and Maintenance Manual"; volume number, if more than one; the name of the project; the building number; the location of the building; the year of construction; the company name of the architect; the company name of the electrical Departmental Representative and the company name of the electrical contractor.

.2 Spline title shall include "Electrical Operation and Maintenance Manual"; volume number, if more than one; the name of the project; the building number; the location of the building and the year of construction.

.3 All binder lettering shall be hot stamped white colour. Cover fonts shall be to the approval of the Departmental Representative.

.4 All final artwork to the approval of the Departmental Representative.

2.4 TAB DRIVERS

.1 All section headings shall be identified by worded tab dividers.

.2 All tabs shall be no smaller than ½" wide, 1/20 cut.

.3 All sub-section tab divider shall be worded and of the same size cut, print type, font, style and character case.

.4 All tabs shall be cut, banked and positioned in a methodical order which applies directly to the Table of Contents with titles as specified.

.5 All tabs to the Departmental Representatives approval.

2.5 INSIDE TITLE PAGE

.1 Shall include identical information as the Binder Cover and Spine Title and shall also include the company names, mailing addresses, telephone and facsimile numbers, and e-mail addresses for the following:

- .1 Architect
- .2 Consulting Electrical Departmental Representative
- .3 Electrical Contractor

2.6 TABLE OF CONTENTS

.1 The Electrical Operations and Maintenance Manual shall include a table of contents outlining the tab divisions utilized in the manual.

2.7 FIRST SECTION HEADING

.1 First Section Only: The first section heading of the manual shall be called "General Information" and this section will be further divided into sub-sections. The subsections shall include, but not be limited to the following:

- .1 Introduction: A typewritten introduction identifying the scope of the manual.
- .2 Legend: An outline of colour coding system used for the subsection tab dividers.
- .3 General Safety: An outline of general safety recommendations.
- .4 General Maintenance: An outline of general maintenance recommendations made by the equipment manufacturer and recommendations on preventative maintenance programs.
- .5 List of Departmental Representatives: The list shall include the company names, mailing addresses, telephone and facsimile numbers, and e-mail addresses where applicable for the following:
  - .1 Architectural Departmental Representative
  - .2 Electrical Departmental Representative
  - .3 Mechanical Departmental Representative
  - .4 Structural Departmental Representative
  - .5 Seismic Departmental Representative
- .6 List of Major Contractors: The list shall include the company names, mailing addresses, telephone and facsimile numbers, and e-mail addresses for the following:
  - .1 General Contractor
  - .2 Electrical Contractor
  - .3 Electrical Subcontractors
  - .4 Mechanical Contractors
- .7 List of Suppliers of Electrical Equipment: The list shall include the

company names complete with mailing addresses, telephone and facsimile numbers and a list of the equipment supplied by each.

.8 Contractor Guarantee and Warranty Certificates: A letter of guarantee shall be provided by the Division 26 Contractor guaranteeing the work for a minimum of one year from the date of completion as per the specification's General Conditions. Guarantee and Warranty statements of sub-trades under the Division 26 contract shall also be included in this sub-section. All manufacturer warranty certificates shall be contained in this sub-section.

.9 Inspection and Verification Reports: All Authorities Having Jurisdiction final inspections reports and certificates, and 3rd party verification reports shall be collected upon completion and contained in this sub-section.

2.8 OTHER SECTION HEADINGS

.1 The O&M manual shall be further provided with, but headings not limited to, the following section headings: (sample)

.1 Service Distribution
.2 Surge Protection
.3 Grounding
.4 Panelboards
.5 Disconnect Switches
.6 Wiring Devices
.7 Lighting Equipment
.8 Exit Lighting
.9 Emergency Lighting
.10 Electrical Heating cable

.2 The Contractor shall allow for 3 additional section headings complete with all tabs and sub-section tabs. These additional sections shall be added by the Contractor at the convenience of the Departmental Representative. Additional sections shall be designated by the Departmental Representative by site instruction or by instruction in O+M manual review. The Contractor shall provide information in these additional sections and sub-sections as directed by the Departmental Representative.

.3 All section headings shall be sub-divided into the following sub-sections and be provided with, but not limited to, the following information:

.1 System Description

.1 a worded description of the system,

.2 include important information such as manufacturer's warranties and factory and manufacturer's commissioning reports,

.3 include equipment nameplate details such as make, model and serial numbers,

.4 include size and capacity of the equipment,

.5 include worded description of system interface to other equipment and other systems,

.6 include description of where equipment and further information can be found in the O+M manual

.7 in some cases the manufacturer's or the supplier's description of the system shall be provided,

.8 in some cases a line diagram shall be included to supplement the worded description,

.9 the system description shall describe the system in general terms highlighting all system features which may be of importance or concern to maintenance personnel.

.2 System Components

.1 tabled format of all system components,

.2 include: supplier name and phone number, catalogue numbers, parts description, replacement parts list including part numbers (replacement parts list can be referenced to a manufacturer's shop drawing where replacement parts are listed on the shop drawing).

.3 include description of how each component interfaces with others to complete the system,

.4 include panel directories, distribution schedules and relay panel schedules, block, schematic and single line diagrams, and equipment schedules as they pertain to each section.

.3 Shop Drawings

.1 insert in same numerical order as system components,

.2 include seismic restraint shop drawing with associated equipment,

.4 Operation and Maintenance Instructions

.1 insert in same numerical order as system components,

.2 include manufacturer's shop drawing (where replacement parts are listed on the shop drawing).

.3 include additional description where local requirements

or site conditions required out-of-the-ordinary installation or system operation,

.4 include a description of each system and its controls,

.5 include control schematics for each system,

.6 describe operation of control changes required for summer or winter operation as applicable,

.7 provide operation and maintenance instructions for each system and each component,

.8 include servicing, maintenance, operation and trouble-shooting instructions for each item of equipment and for interface equipment to other systems,

.9 provide a description of maintenance action to be taken in the event of equipment failure,

.10 include safeguards to check if equipment goes off-line, as well as trouble-shooting sequences,

.11 reference replacement parts and/or maintenance materials lists provided and where to locate the references lists,

.12 prepare and insert all information pertinent to the electrical operation and maintenance when the need for the same becomes apparent during construction or installation, and when demonstration and instructions are carried out.

.5 Test Results

.1 where applicable, insert in same numerical order as system components,

.2 this sub-section is reserved for Contractor and Manufacturer's test results only. 3rd party test results are to be inserted in the General Information section in sub-section Inspection and Verification Reports.

.6 As-built Drawings

.1 reduced AutoCAD format (8 ½" x 11" or right half-quarter folded 11" x 17"),

.2 include all wiring, termination details, wire numbers/designators, location, and size/dimensions where applicable,

.3 include additional information as necessary to document the installation for future maintenance of the system.

2.9 ADDITIONAL INFORMATION

.1 The following information shall also be included in addition to the specified requirements:

.1 Power Distribution
- .1 Single Line Diagram(s)
- .2 Wiring Diagram(s)
- .3 Underground Service Entrance Conduits Location Drawing(s)
- .4 Panelboards
- .5 Moulded Case Breakers
- .6 Receptacles and Outlets
- .7 Panel Directories
- .8 Maintenance Instructions
- .9 Trip Settings

.2 Motor Controls
- .1 Motor Control Equipment
- .2 Disconnect Switches
- .3 Motor Starters
- .4 Maintenance Instructions
- .5 Wiring Diagrams
- .6 Over-load Settings

.3 Grounding
- .1 System Ground
- .2 Equipment Grounding
- .3 Telephone/Data Grounding
- .4 Auxiliary Bonding
- .5 Connection Diagram
- .6 Ground Bus

.4 Exit and Emergency Lighting
- .1 Exit Luminaries
- .2 Emergency Lights
- .3 Battery Pack Relay Control Panel(s)
- .4 Riser Diagram Showing Connections to Relay Control Panel(s).

.5 Lighting
- .1 Fluorescent Luminaries
- .2 HID Fixtures
- .3 Exterior Fixtures
- .4 Ballasts, lamps and replacement parts

END OF SECTION

PART 1 - GENERAL

1.1 WIRE DE-RATING

.1 16 A minimum wire ampacity capacity after applicable de-rating factors.

1.2 AUXILIARY SYSTEMS

.1 Refer to specific specifications sections for wire and cable requirements for auxiliary systems.

.2 Follow equipment manufacturer's wiring and cabling recommendations.

PART 2 - PRODUCTS

1.1 BUILDING WIRES

.1 Stranded for #10 AWG and larger for power wiring. Stranded for all control wiring.

.2 Minimum size:
- .1 #12 AWG for power and lighting in suites,
- .2 #14 AWG stranded for control,
- .3 #12 AWG for emergency lighting.

.3 Copper conductors only: size as indicated and as required for installation de-rating, with 600 V minimum insulation, 1000 V insulation where shown on the drawings, of chemically cross-linked thermosetting polyethylene material rated R90, RW90 or RWU90.

1.2 NON-METALIC SHEATHED CABLE

.1 Permitted in wood frame construction where allowed by code.

.2 Only XLPE type cable will be permitted. Minimum size #12 Awg.

.3 Non- metallic sheathed copper cable type NMD-90, NMW-10 where approval is obtained from authorities having jurisdiction.

.4 Non-metallic sheathed cable is not permitted in fire wall.

1.3 ARMOURED CABLES

.1 Conductors: insulated, copper, minimum size to be #12 AWG

.2 Type AC90.

.3 Armour: interlocking type fabricated from aluminum strip.

.4 Armoured cables shall be permitted where allowed by code for lighting 'drop' connections to single lighting fixtures only, where the AC cable drop connection is:
- .1 completely concealed behind architect finish,
- .2 less than 2000 mm in total length,
- .3 a dedicated drop cable from conduit box to a single fixture (fixture to fixture wiring by AC cabling is not permitted).

1.4 CONTROL CABLES

.1 Type LVT: 2 soft annealed copper conductors, sizes as indicated or where size has not been indicated provide wire conductor size as required by code and as required by the equipment manufacturer, LVT cables shall have thermoplastic insulation, outer covering of cotton braid thermoplastic jacket, and armour of closely wound aluminum wire.

.2 Low energy 300 V control cable:
- .1 Conductors: solid, multiconductor, insulated, copper, minimum size #18 AWG.
- .2 Insulation: 105 C flame retardant PVC.
- .3 Outer Jacket: 105 C flame retardant PVC.
- .4 Optional Armour: interlocked aluminum or galvanized steel with or without overall jacket.

PART 3 - EXECUTION

3.1 BUILDING WIRING

.1 Install building wires as follows:
- .1 In conduit systems in accordance with Section 26 05 34.
- .2 In surface and lighting fixture raceways in accordance with Section 26 05 36.
- .3 To the approval of the Departmental Representative.

.2 NMS cable as specified and where allowed by code.

.3 AC cabling where specified in this section, the drawings, and only where permitted by code.

3.2 INSTALLATION OF FEEDERS

.1 Panel and motor feeders larger than #10 AWG to be continuous and without splice from the breaker or starter to the panel or disconnect.

3.3 TESTING

.1 Provide contractor testing as specified in section 26 05 04 "Contractor Testing".

.2 Insert test result data in O+M manuals.

3.4 AS-BUILT INFORMATION

.1 All wiring information shall be provided on the as-built drawings.

END OF SECTION

PART 1 - GENERAL

1.1 RELATED WORK

.1 "Common Work Results Electrical" - 26 05 01.

.2 General Requirements: Division 01

.3 Finishes: Division 09

PART 2 - PRODUCTS

2.1 IDENTIFICATION GENERAL

.1 Refer to equipment sections for specific requirements.

.2 Clearly identify switchboards, power distribution centres, cable tray, power panels, distribution panels, lighting panels, disconnect switches, starters, control stations, contactors, motor control centres, low voltage terminal cabinets, junction boxes, remote On/Off switches, light switches, motors and transformers by permanent nameplates described below.

.3 Panels: identify the panels as shown on drawings, and as per schedules, and the main voltage using labels.

.4 Terminal cabinets and pull boxes: indicate the system and the voltages using labels.

.5 Remote On/Off switches: indicate areas being served or equipment controlled.

.6 Cable tray: identify to voltage being carried in tray (or portion thereof) using lamicoid nameplates.

.7 Light switches: identify area being controlled using manufacturer standard product.

2.2 LAMICOID NAMEPLATES

.1 Label all equipment using lamicoid nameplates as follows:

- .1 Labels to be white background with 10 mm black letters, mounted in conspicuous locations on the surface of the equipment, except in finished areas locate labels in flush panels mounted on panel front inside enclosure.
- .2 Labels to include equipment description and circuit number. Equipment description shall correspond to Contractor's as-built drawings.
- .3 Labels for all; panelboards, starters, disconnect switches, terminal cabinets and communication terminal cabinets. Labels to indicate system and/or voltage characteristics and equipment name (example: Panel A, 120/208 V, 3 PH).
- .4 Provide a complete list of nameplates for review and approval by the Departmental Representative, prior to placement of fabrication order. (Shop Drawing Review).
- .5 Wording on nameplates to be approved prior to manufacture.

.6 Labels subject to the Departmental Representative's approval.

2.3 PANEL SCHEDULES

.1 Provide type written panel directories to be included with panels installed.

.2 Labels to include:
- .1 The size of overcurrent
- .2 The area served (ie: "Rooms 122, 123 outlets")

2.4 COLOUR CODING

.1 Exposed conduits in mechanical and electrical rooms and exposed conduits above removable ceilings and where they enter or leave a box to be colour coded. Option is to paint all conduit fittings.

.2 All junction boxes, pull boxes, panels and their covers shall be painted according to the colour coding schedule.

.3 Colour coding of this equipment is to provide an easy and consistent means of identification of all electrical systems.

.4 Colour Code Schedule:
- .1 120/208 V - Power, Lighting Grey
- .2 120/208 V - Emergency (UPS) Grey with 50 mm black letters
- .3 347/600 V - Power, Lighting Sand
- .4 Telephone System Black
- .5 Data Communication - DDC Yellow
- .6 Fire Alarm, Security Red

.5 All conduit entering or leaving these enclosures shall be identified by tape markers.

2.5 COLOUR CODING OF CONDUCTORS

.1 All conductors to be colour coded throughout the building with same colour applying to the same phase throughout. Colour coding to be by insulation colour or permanently applied colour banding at termination ends. Color coding to be as follows:

- .1 Equipment Bonding: Green
- .2 Neutral Conductor: White
- .3 120/208 Phase Wires: Red/Black/Blue
- .4 347/600 Phase Wires: Orange/Brown/Yellow

.2 Each system to follow its own colour coding. If system of same colour coding terminates in same piece of equipment, each system to be identified to which system it belongs.

PART 3 - EXECUTION

3.1 CONDUIT IDENTIFICATION

.1 All cable and conduit for electrical systems to be identified within 200 mm of exiting panel locations, pull box locations, within 200 mm of where they enter or leave a room or non-accessible ceiling space, and 4 m on centre within an area.

3.2 JUNCTION BOX

.1 All pull and junction boxes to be labeled as to use.

.2 Where boxes are exposed thermal tape labels are acceptable.

.3 Where boxes are concealed in t-bar ceiling marker pen is acceptable.

.4 The splicing of conductors inside junction boxes allowed in this specification shall be done with Weidmuller SAK-10 or equivalent terminals.

3.3 IDENTIFICATION OF CONDUCTORS

.1 At all distribution centres, pull boxes, wireways, etc., feeder conductors of each feeder group to be neatly laced or clipped into a feeder group with each conductor identified as to load fed.

END OF SECTION

PART I - GENERAL

1.1 REFERENCE STANDARDS

.1 Complete grounding work to CSA C22.1 2018.

1.2 SCOPE OF WORK

.1 Refer to drawings for extent of grounding in addition to code requirements.

.2 Provide an electrical system ground with an earth ground maximum resistance as specified in this section; Tests.

PART 2 - PRODUCTS

2.1 MATERIALS

.1 Grounding equipment to CSA C22.2 latest revision; Grounding and Bonding Equipment.

2.2 EQUIPMENT

.1 Clamps for grounding of conductor, size as required.

.2 Grounding rod clamps to be high press or chemical bond only. Bolt-on clamps are not acceptable for grounding rod connections.

.3 Circuit and equipment grounding conductors: stranded copper, soft annealed, size as indicated or as required by code.

.4 Insulated grounding conductors to Section 26 05 21.

.5 Copper ground bus 50 mm X 200 mm X 6 mm, mounted on insulated standoff brackets, for connection of grounds.

2.3 MANUFACTURERS

.1 Acceptable manufacturers: Burndy Corp., Erico Inc. Cadweld Div., Federal Pioneer Ltd., McGraw Edison.

PART 3 - EXECUTION

3.1 INSTALLATION GENERAL

.1 Install complete permanent, continuous, system and circuit, equipment, grounding systems, including electrodes, conductors, connectors, accessories, as indicated, to conform to requirements of Owner, and local authority having jurisdiction over installation.

.2 Install connectors to manufacturer's instructions.

.3 Protect exposed grounding conductors from mechanical injury.

.4 Make buried connections, and connections for lightning protection using copper welding by thermal process.

.5 Use mechanical connectors for grounding connections to equipment provided with lugs.

.6 Soldered joints not permitted.

.7 Comply with requirement of CSA C22.2 No. 0.4 and Canadian Electrical Code.

3.2 CIRCUIT GROUND CONDUCTORS

.1 Install grounding bushings, grounding studs and grounding jumpers at all distribution centres, pull boxes, motor control centres, panelboards where separate grounding conductors are indicated or required by code.

.2 Install grounding connection to typical equipment included in, but not necessarily limited to the following list:

.1 service equipment,
.2 transformers,
.3 switch gear,
.4 duct systems,
.5 motor frames,
.6 distribution panels,
.7 outdoor lighting,
.8 water service entrance.

.3 Bonding Jumpers: green insulation, sized by Electrical Code Table 16, sized for over current device protecting the circuit. Connect to grounding bushings on conduit, to lugs on boxes, tubs and other enclosures. Connection to neutral made only at service entrance and at secondary of distribution transformer.

.4 Install bonding wire as required by Code in all flexible conduit connected at each end to a grounding bushing, solderless lug, clamp, cup washer and screw.

.5 Integral bond conductor to be installed in all conduits with the exclusion of the utility to main service switch conduit(s).

3.3 GAS AND FUEL PIPE GROUNDING

.1 All interior metallic gas piping which may become energized is to be made electrically continuous and to be bonded not less than #6 AWG in accordance with requirements of Canadian Electrical Code.

3.4 METALLIC WASTE WATER PIPE GROUNDING

.1 Each metallic waste water piping system to the building to be grounded by bonding it to the Grounding interior metallic water supply system by copper bonding jumper of not less than #6 AWG as per the Canadian Electrical Code.

3.5 ELECTRICAL SYSTEM GROUNDING

.1 Provide grounding conductor(s) in main service disconnect switch to solidly ground the system. Grounding conductors minimum as shown.

3.6 CABLE TRAY BONDING

.1 Install cable tray bonding conductor at intervals of not greater than 15 m by a green insulation copper bonding conductor sized to meet the requirements of the Electrical Code Table 16 but in no case shall be smaller than #6 AWG.

3.7 AS-BUILT INFORMATION

.1 All grounding system information shall be provided on the as-built drawings.

.2 Provide:

.1 grounding and bonding locations,
.2 grounding and bonding conductor gauge and type
.3 additional installation detail(s) as required to document the installation.

PART 4 - TESTS

4.1 TESTS

.1 Building system ground: measure system ground resistance with earth ground megger tester; install additional ground rods and conductors as required for ground resistance less than 25 ohms.

.2 Provide field test results in O&M manual.

END OF SECTION

PART 1 - GENERAL

1.1 RELATED WORK

.1 Seismic Restraint: Section 26 05 48.

PART 2 - PRODUCTS

2.1 SUPPORT CHANNELS

.1 U shape, size 41 mm x 41m m, 2.5 mm thick or 25 mm x 25 mm x 2.5 mm, surface/suspended, set in poured concrete walls and ceilings as indicated and as required.

2.2 MANUFACTURERS

.1 Acceptable manufacturers: Burndy Ltd., Electrovert Ltd., Unistrut Ltd.

PART 3 - EXECUTION

3.1 INSTALLATIONS

.1 All equipment and conduits larger than 19 mm in any dimension shall be securely attached to building structure by means of channel support. Single conduits 19 mm or smaller may be attached directly to the building structure.

.2 Other than lay-in fixtures, equipment shall not be fastened to T-bar ceilings.

.3 Secure equipment to poured concrete with expandable inserts.

.4 Support equipment, conduit or cables using clips, spring-loaded bolts, cable clamps designed as accessories to basic channel members.

.5 Fasten exposed conduit or cables to building construction or support system using straps.
- .1 One-hole malleable iron or steel straps to secure surface conduits and cables 50 mm and smaller.
- .2 Two-hole steel straps for conduits and cable larger than 50 mm.
- .3 Beam clamps to secure conduit to exposed steel work.

.6 Suspended support systems.
- .1 Support individual cable or conduit runs with 10 mm dia threaded rods and spring clips.
- .2 Support 2 or more cables or conduits on channels supported by 10 mm dia threaded rod hangers where direct fastening to building construction is impractical; channel support to be sized for minimum of 25% future support capacity.

.7 For surface-mounting of two or more conduits, use channels; channel support to be sized for minimum of 25% future support capacity.

.8 Provide metal brackets, frames, hangers, clamps and related types of support structures where indicated or as required to support conduit and

cable runs.

.9 Ensure adequate support for raceways and cables dropped vertically to equipment where there is no wall support.

.10 Do not use wire lashing or perforated strap to support or secure raceways or cables.

.11 Do not use supports or equipment installed for other trades for conduit or cable support except with permission of other trade and approval of Departmental Representative.

.12 Install fastenings and supports as required for each type of equipment cables and conduits, and in accordance with manufacturer's installation recommendations.

END OF SECTION

PART 1 - GENERAL

1.1 SHOP DRAWINGS AND PRODUCT DATA

.1 Submit shop drawings and product data for cabinets in accordance with Section 26 05 01.

.2 Flush mount boxes and cabinets shall be provided with covers that finish the box or cabinet in a cosmetically complete transition to architectural surroundings; openings left by poor fit to architectural surroundings will not be accepted.

.3 Where boxes and where cabinets are installed in fire separations and fire rated walls provide fire protection rated materials, equipment and installation as required.

PART 2 - PRODUCTS

2.1 JUNCTION AND PULL BOXES

.1 Welded steel construction with screw-on flat covers for surface mounting as applicable in; attic spaces, crawlspaces, electrical rooms and mechanical rooms.

.2 Covers with a 25 mm minimum extension around all edges for flush-mounted pull boxes and flush mount junction boxes.

2.2 CABINETS

.1 Sheet steel cabinet with hinged door, latch, lock mechanism and back-pan.

.2 Covers with a 25 mm minimum extension around all edges for flush-mounted cabinets.

PART 3 - EXECUTION

3.1 JUNCTION, PULL BOXES AND CABINETS INSTALLATION

.1 Install pull boxes in inconspicuous, but accessible spaces.

.2 Mount cabinets with top not higher than 2000 mm above finished floor.

.3 Provide pull boxes at 30m intervals along conduit runs, or when cumulative conduit bends reach 360 degrees.

.4 Do not install junction boxes or pull boxes in architectural detailed wall, ceiling or floor finishes unless specifically shown on the drawings or without the written approval of the Architect.

.5 Where specified and as where shown; prime and paint boxes and covers.

3.2 IDENTIFICATION

.1 Provide identification lamicoid labels that indicate system name, voltage and phase in accordance with Section 26 05 01.

END OF SECTION

PART 1 - GENERAL

1.1 DESCRIPTION

.1 Provide outlet boxes as required to enclose devices, permit pulling conductors and for wire splices.

1.2 REFERENCE

.1 Reference Section 26 05 25 "Identification".

PART 2 - PRODUCTS

2.1 OUTLET AND CONDUIT BOXES - GENERAL

.1 Size boxes in accordance with CSA C22.1, Section 12.

.2 102 mm square or larger outlet boxes as required for special devices.

.3 Gang boxes where wiring devices are grouped. Do not use sectional boxes.

.4 Blank cover plates for boxes without wiring devices; covers to match surrounding device covers; to the approval of the Departmental Representative.

.5 Install barriers where outlets for more than one system are grouped.

.6 Install properly sized boxes at the rough in stage. Box extensions will not be permitted.

2.2 SHEET STEEL OUTLET BOXES

.1 102 mm square flush outlet boxes for flush device installations in walls c/w extension and plaster rings as required.

.2 102 mm square or octagonal outlet boxes for lighting fixture outlets.

2.3 SURFACE CONDUIT BOXES - WP

.1 Cast FS or FD aluminum boxes with factory- threaded hubs and mounting feet for surface wiring of switches and receptacle in outdoor locations.

2.4 FITTINGS GENERAL

.1 EMT couplings and connectors to carry agency Approval acceptable for Yukon.

.2 Knock-out fillers to prevent entry of foreign materials.

.3 Conduit outlet bodies for conduit up to 32mm and pull boxes for larger conduits.

PART 3 - EXECUTION

3.1 INSTALLATION

.1 Support boxes independently of connecting conduits.

.2 Fill boxes with paper, sponges or foam or similar approved material to prevent entry of construction material.

.3 For flush installations, mount outlets flush with finished wall using plaster rings to permit wall finish to come within 6mm of opening.

.4 Provide correct size of openings in boxes for conduit, mineral insulated and armoured cable connections. Reducing washers not allowed.

3.2 AS-BUILT INFORMATION

.1 All outlet boxes and conduit boxes information shall be provided on the as-built drawings.

.2 For pull boxes provide:
- .1 box location,
- .2 box type,
- .3 additional installation detail(s) as required to document the installation.

END OF SECTION

PART 1 - GENERAL

1.1 LOCATION OF CONDUITS

.1 Drawings do not indicate all conduit runs. Those indicated are diagrammatic only.

.2 Note that where required so by drawings conduit is to be routed in a specific manner.

.3 Exact conduit installation location to be determined on-site, to the approval of the Departmental Representative.

1.2 REFERENCE

.1 Reference Section 26 05 25 "Identification".

PART 2 - PRODUCTS

2.1 CONDUITS

.1 Rigid metal conduit: to CSA C22.2 No. 45.

.2 Electrical metallic tubing (EMT) conduit: to CSA C22.2 No. 83.

.3 Liquid tight flexible metal conduit: to CSA C22.2 No. 56.

.4 Rigid PVC conduit: to CSA C22.2 No. 211.2

2.2 CONDUIT FASTENINGS

.1 One hole straps for conduits 37 mm or smaller.

.2 Two hole straps for conduits larger than 37 mm.

.3 Channel type supports for two or more conduits run in parallel and in close proximity.

2.3 CONDUIT FITTINGS

.1 Manufactured and approved for use with conduit specified.

.2 Factory bends required for conduits greater than 32mm diameter.

PART 3 - EXECUTION

3.1 INSTALLATION

.1 Install conduits to conserve headroom in exposed locations and cause minimum interference in spaces through which they pass.

.2 Liquid tight flexible metal conduit permitted if concealed or in service rooms, and the distance is less than 2000mm, and only where used for individual connection of specific equipment. Connecting fixture to fixture with liquid tight flexible metal conduit is not permitted.

.3 Conceal all conduits except as otherwise noted.

.4 Surface mount conduit shall be acceptable in mechanical rooms, electrical rooms, LAN room, Radio equipment room, and above T-bar ceilings. Surface conduit in the other areas requires the Departmental Representatives

specific approval.

.5 Run all conduits parallel or perpendicular to building lines.

.6 Group conduits where possible and fasten to common channel support.

.7 Do not pass conduits through structural members without written approval from a Structural Departmental Representative.

.8 Where conduits pass through nonstructural concrete, core the concrete with a diamond cutting tool or to approval of the Departmental Representative.

.9 Do not locate conduits to less than 75 mm parallel to steam or hot water lines. Maintain a minimum 75mm clearance where conduit is run parallel to steam or hot water lines. Maintain a minimum of 25 mm clearance at crossovers.

.10 Size conduits to suit application and to code. Conduit sizes on drawings are minimum only based on design standards. The Contractor shall confirm all equipment requirements with shop drawings prior to rough-in of conduits.

.11 Provide 2 mm stranded nylon pull cord in empty conduits to facilitate future wire pull.

3.2 AS-BUILT INFORMATION

.1 All conduit information shall be provided on the as-built drawings.

.2 Provide:

.1 conduit trade size,

.2 conduit location,

.3 box and cabinet size (dimensions) and NEMA rating,

.4 conduit support details; where required by other sections provide Seismic shop drawings to supplement conduit support information,

.5 spare conduit and pull box locations,

.6 additional installation detail(s) as required to document the installation.

.7 Circuit and conduit designation.

END OF SECTION

PART 1 - GENERAL

1.1 RELATED WORK

.1 "Fastenings and Supports For Electrical Systems": Section 26 05 29.

1.2 WORK INCLUDED

.1 Electrical equipment to operate without objectionable noise or vibration. If, in the Departmental Representative's opinion, equipment is operating with excessive noise or vibration, equipment and isolation system shall be improved at no additional cost.

1.3 SEISMIC RESTRAINT

.1 Provide seismic restraint and anchorage for all electrical equipment and services in accordance with the current edition of the National Building Code of Canada, 2010 edition, Subsection 4.1.9. and table 4.1.9.E. as well as per BC Electrical Contractors Association Seismic Restraint Manual, 1st Edition.

.2 All support equipment shall be tested in an independent testing agency or shall be certified by a registered Professional Departmental Representative to demonstrate that the equipment meets the requirements of all Codes and Bylaws.

.3 All seismic bracing to be certified by a professional Departmental Representative licensed to practice in the Yukon.

.4 Seismic restraint Departmental Representative to conduct at least one site visit in person.

1.4 SHOP DRAWINGS

.1 Submit shop drawings in accordance with Section 26 05 01.

PART 2 - PRODUCTS

2.1 CONDUIT

.1 Liquid-tight flexible metal conduit, size as indicated.

2.2 STRUCTURAL BASES

.1 Structural steel rail base, sized for application, complete with isolation elements attached to base brackets, pre-drilled holes to receive equipment anchor bolts.

2.3 SEISMIC CONTROL MEASURES

.1 General:

- .1 Seismic control systems to work in all directions.
- .2 Fasteners and attachment points to resist same maximum load as seismic restraint.
- .3 Drilled or power driven anchors and fasteners not permitted.
- .4 No equipment, equipment supports or mounts to fail before failure

of structure.

.5 Supports made of cast iron or threaded pipe not permitted.

.6 Seismic control measures not to interfere with integrity of fire stopping.

.2 Static Equipment:

.1 Anchor equipment to equipment supports. Anchor equipment supports to structure.

.2 Suspended equipment:

.1 Use one or more of following methods depending upon site conditions and or as indicated:

.1 Install tight to structure.

.2 Cross brace in all directions.

.3 Brace back to structure.

.4 Cable restraint system.

.3 Seismic Restraints:

.1 Cushioning action to be gentle and steady.

.2 Shall never reach metal-like stiffness.

.3 Vibration Isolation Equipment:

.1 Seismic control measures not to jeopardize noise and vibration isolation systems. Provide 6 to 9mm clearance during normal operation of equipment and systems between seismic restraint and equipment.

.2 Incorporate seismic restraints into vibration isolation system to resist complete isolator unloading.

.4 Conduit:

.1 Hangers longer than 300mm; brace at each hanger.

.2 To be compatible with requirements of anchoring of piping systems.

.5 Bracing Methods:

.1 To approval of Departmental Representative.

.2 Structural angles or channels.

.3 Cable restraint system incorporating grommets, shackles and other hardware to ensure alignment of restraints and to avoid bending of cables at connection points. Incorporate neoprene into cable connections to reduce shock loads.

2.4 T-BAR FIXTURES

.1 As per BC Electrical Contractors Association Seismic Restraint Manual, 1st Edition: Fluorescent Light fixture - Figure 4.26.

PART 3 - EXECUTION

3.1 INSTALLATION

.1 Install vibration isolation in accordance with manufacturer's instructions and adjust mountings to level equipment.

.2 Ensure electrical connections to isolated equipment do not reduce system flexibility, and that conduit does not transmit vibrations through walls and floors.

.3 If inadequate isolation is provided, improve isolation to the satisfaction of the Departmental Representative at no additional cost.

.4 Seismic control measures to meet NBC-2010 and the requirements of the Authorities having Jurisdiction.

.5 Drilled or power driven anchors not permitted for use with seismic control measures.

.6 Division 26 to reference and comply with all requirements listed in specification section 23 05 49 "Seismic Restraint Systems".

3.2 ISOLATION SCHEDULE

.1 Motor driven equipment: liquid-tight flexible metal conduit.

END OF SECTION

PART 1 - GENERAL

1.1 SHOP DRAWINGS

.1 Submit shop drawings in accordance with Section 26 05 01 "Common Work".

.2 Drawings to include electrical detail of panel, branch breaker type, quantity, ampacity and enclosure dimension.

PART 2 - PRODUCTS

2.1 PANELBOARDS

.1 Panelboards: to CSA C22.2 No. 29.

.2 Panelboards: mains, number of circuits, and number and size of branch circuit breakers, as indicated.

.3 Tin plated aluminum bus or silver plated copper bus with full size 100% rated neutrals.

.4 Mains to match existing.

.5 Finish trim for all panelboards with hinged door assembly as standard. Provide door lock for all flush mount panelboards.

.6 Provide equipment identification in accordance with Section 26 05 25 "Identification".

.7 Complete circuit directory with typewritten legend showing location and load of each circuit for all new panelboards.

.8 Sized for full width breakers.

.9 All surface mounted panels to be provided with drip-shield.

.10 All panelboards to have isolated neutral bus.

.11 All panelboards to be seismically rated for minimum of Zone 3 area.

.12 Provide: sub-feed lugs, and interconnect wiring as required. Note that sub-feed wiring neutrals to be installed through common raceway as hot conductor sub-feed connections.

.13 Integral transient surge suppression unit where specified or shown on the drawings.

2.2 BACKBOARDS

.1 All surface mounted panelboards to be mounted on 19 mm G1S painted plywood backboards. Paint to be fire retardant grey colour. Back boards to be provided by general contractor; refer to section 06 01 11 "Rough Carpentry - Short Form" for further details.

2.3 EQUIPMENT

.1 Provide equipment identification in accordance with Section 26 05 25

"Identification".

.2 Complete circuit directory with typewritten legend showing location of each circuit.

.3 Panelboards: current capacity, minimum circuits, mounting method, integral transient surge suppression systems, and main breakers as indicated on the drawings and as specified.

2.4 BREAKERS GENERAL

.1 GFEDP breakers for 30 mA equipment protection.

.2 GFCI breakers for 5 mA personnel protection.

.3 Manufacturer's tie-locks for critical and code required systems:
- .1 fire alarm
- .2 ULC approved communicators (and security equipment) used for fire alarm communication.

2.5 MANUFACTURERS

.1 Acceptable manufacturers: Schneider Electric, Eaton and Siemens.

PART 3 - EXECUTION

3.1 INSTALLATION

.1 Locate panelboards as indicated and mount securely, plumb, true and square, to adjoining surfaces.

.2 Install surface-mounted panelboards on plywood backboards. Where practical, group panelboards on common backboard.

.3 Install flush-mount panelboard in wall framing. Report to the general contractor and to the Architect during rough-in where wall framing depth does not allow flush mount of electrical tub trim. General contractor to provide architectural trim around panel tub, increased depth of framed wall or other increased framing depth work to the approval of the architect. Contractor to request written instructions from the Architect prior to implementation of trim or wall depth increase work.

.4 Coordinate with the General Contractor for the provision of continuous fire rated wall, ceiling and floor assemblies where panelboards are flush mount in fire separations and fire rated partitions.

.5 Mount panelboards to height specified in Section 26 05 01 "Common Work", 26 24 17 "Panelboards" or as indicated.

.6 Connect loads to circuits.

.7 Connect neutral conductors to common neutral bus with respective neutral identified.

.8 All panelboard feeders to be continuous without splice.

.9 All panelboards to have minimum three 19 mm spare conduits to the ceiling space and three spare 19 mm conduits to the floor space below the panelboard location (where applicable space is preset). Spare conduits to be run to a free and clear location to the approval of the Departmental Representative.

3.2 TESTING

.1 Provide contractor testing as specified in Section 26 05 04 "Contractor Testing".

3.3 AS-BUILT INFORMATION

.1 All panelboard information shall be provided on the as-built drawings.

END OF SECTION

PART 1 - GENERAL

1.1 SCOPE

.1 To install service entrance equipment to the approval of the local supply authority and inspection authorities.

1.2 SHOP DRAWINGS

.1 Submit shop drawings in accordance with Section 26 05 01.

.2 Drawings to include:

- .1 Floor/wall anchoring method and foundation lofts.
- .2 Dimensioned cable entry and exit locations
- .3 Dimensioned position and ampacity of bus.
- .4 Overall length, height, and depth.
- .5 Dimensioned layout of internal and front panel mounted components.

1.3 RELATED WORK

.1 Plywood backboard: Section 06 10 00- Rough Carpentry.

1.4 MAINTENANCE DATA

.1 Provide maintenance data for incorporation into maintenance manual specified in Section 26 05 01.

1.5 MAINTENANCE MATERIAL

.1 Provide maintenance materials in accordance with Section 26 05 01.

PART 2 - PRODUCTS

2.1 POWER SUPPLY

.1 Power supply: 120/208 V 3-phase, 4 wire, grounded neutral, 60 Hz., ampacity rating as indicated.

2.2 AUTOMATIC TRANSFER SWITCH

.1 Refer to Section 26 36 32.

2.3 BACKBOARDS

.1 All surface mounted distribution panels to be mounted channel supports, channel supports fastened to 19 mm G1S painted plywood backboards. Backboard paint to be fire retardant grey colour.

2.4 BREAKERS

.1 Moulded case circuit breakers, quick make, quick break type, for manual and automatic operation with temperature compensation for 40 degrees Celsius. Use common trip breakers with single handle for multi-pole applications. Full width breakers to suit application and to match panels.

2.5 EQUIPMENT IDENTIFICATION

.1 Label all panelboards with lamicoid labels as to voltage, phase and panel number.

.2 A distribution single line drawing reflecting the as built condition to be provided by Division 26. This single line drawing is to be mounted in solid frame with protective transparent cover and installed in a conspicuous location in the main electrical room. Minimum size to be 11"x17".

2.6 POWER SUPPLY AUTHORITY METER

.1 Mounting accessories and wiring for the following, supplied by the power supply authority where applicable:

.1 Current transformers
.2 Demand meter.

.2 Separate compartment and metal raceway for exclusive use of power supply authority metering where applicable.

.3 All service entrance equipment and installation to the approval of the supply authority.

2.6 MANUFACTURERS

.1 Acceptable manufacturers: Eaton and Schneider Electric

PART 3 - EXECUTION

3.1 INSTALLATION

.1 Install panelboard flush or surface as indicated.

.2 Install all surface panelboards on channel supports and plywood backboards.

.3 Install seismic restraint measures as required.

.4 Install breakers in panelboards.

.5 Install grounding and bonding conductors and connections.

.6 Connect loads to circuits.

.7 Connect neutral conductors to common neutral bus.

.8 Install distribution single line drawing.

.9 Panel feeders to be free of splices throughout length.

3.2 TESTING

.1 Provide contractor testing as specified in section 26 05 04 "Contractor Testing".

3.3 AS-BUILT INFORMATION

.1 All distribution system information shall be provided on the as-built drawings.

END OF SECTION

PART 1 - GENERAL

1.1 SHOP DRAWINGS

.1 Submit shop drawings for all wiring devices.

PART 2 - PRODUCTS

2.1 SWITCHES

.1 Manually operated spec grade AC switches. Hubble 1200 series or approved equal.

.2 20 A, 120 V single pole or double pole and three-way or four-way switches as indicated. Hubbell 1220 series or approved equal.

.3 Switches complete with terminal holes for 5 mm wiring, silver alloy contacts, suitable for back or side wiring.

.4 Toggle operated, fully rated for tungsten filament and fluorescent lamps and HP rated for motor loads where applicable.

.5 Switches of one manufacturer throughout project, unless otherwise specified.

.6 Toggle colour to be white.

2.2 RECEPTACLES

.1 Duplex receptacles, spec grade, CSA type 5-15 R, 125 V, 15A U ground, suitable for back and side wiring.

.2 Weatherproof receptacles and ground fault protection as required and where indicated.

.3 Other receptacles with ampacity and voltage as indicated.

.4 Receptacles of one manufacturer throughout project unless otherwise approved by the Departmental Representative.

.5 Install all receptacles in the vertical plane unless otherwise noted.

.6 All receptacles with in suites to be tamper resistance type "TP", accept for microwave, refrigerators, freezers, or kitchen counter. Standard of acceptance: Leviton T5320-SW or equivalent.

.7 GFCI type to be equal to Hubbell GF-5362 or Bryant GFR752FT-I or equivalent.

.8 Receptacles to be white unless otherwise approved by the Departmental Representative.

2.3 COVER PLATES

.1 Sheet steel utility box cover for wiring device installed in surface mounted utility box.

.2 White plastic, 1 mm thick, cover plate for receptacles, switches and devices mounted in flush boxes.

.3 Weatherproof double lift spring loaded plastic cover plate complete with gasket for duplex receptacles as indicated, "WP". c/w four mounting screws.

.4 Metal Cast "FS" type cover plates for wiring devices mounted in surface-mounted FS or FD type conduit boxes. Attachment with 4 mounting screws to box.

.5 Provide cover plates for all wiring devices from one manufacturer throughout project.

PART 3 - EXECUTION

3.1 SWITCHES

.1 Install single throw switches with handle in "UP" position when switch closed.

.2 Install switches in gang type outlet box when more than one switch is required in one location.

.3 Install switches and receptacles in gang type outlet box when a switch(s) and receptacle(s) are shown at the same location and at the same plane.

.4 Mount toggle switches at height specified in Section 26 05 01 or as indicated.

3.2 RECEPTACLES

.1 Install receptacles vertically in gang type outlet box when more than one receptacle is required in one location.

.2 Mount receptacles at height specified in Section 26 05 01 or as indicated.

.3 Where split receptacle has one portion switched, mount vertically and switch upper portion. Provide labeling on cover plate to indicate switched receptacle.

.4 Receptacles for LAN rooms, for computer workstations, and where shown on the drawings, are to have separate neutrals for each circuit.

3.3 COVER PLATES

.1 Install suitable common cover plates where wiring devices are grouped.

.2 Do not use cover plates meant for flush outlet boxes on surface-mounted boxes.

.3 Install exterior cover plates with thread lug compound on all screws; Silicone or Copper base.

3.4 TESTING

.1 Provide contractor testing as specified in section 26 05 04 "Contractor Testing".

END OF SECTION

PART 1 - GENERAL

1.1 PRODUCT DATA

.1 Submit product data in accordance with Section 26 05 00 "Common Work Results - Electrical".

PART 2 - PRODUCTS

2.1 BREAKERS GENERAL

.1 Full width bolt-on moulded case circuit breakers: quick-make, quick-break type, for manual and automatic operation with temperature compensation for 40°C ambient.

.2 Common-trip breakers: with single handle for multi-pole applications.

.3 Magnetic instantaneous trip elements in circuit breakers to operate only when value of current reaches setting.

.4 Trip settings on CDP breakers with adjustable trips to range from 3-8 time current rating.

.5 Circuit breakers with interchangeable trips, as indicated.

.6 HID rated breakers for HID circuits.

.7 GFEDP breakers for 30 mA equipment protection.

.8 GFCI breakers for 5 mA personnel protection.

.9 Manufacturer's tie-locks for critical and code required systems:
.1 fire alarm
.2 ULC approved communicators (and security equipment) used for fire alarm communication.

.10 Unless specifically called for, split breakers are not to be used.

2.2 THERMAL MAGNETIC BREAKERS

.1 Moulded case circuit breaker to operate automatically by means of thermal and magnetic tripping devices to provide inverse time current tripping and instantaneous tripping for short circuit protection.

2.3 MANUFACTURERS

.1 Acceptable manufacturers: To match panels.

PART 3 - EXECUTION

3.1 INSTALLATION

.1 Install circuit breakers as indicated.

3.2 TESTING

.1 Provide contractor testing as specified in section 26 05 04 - Contractor Testing.

.2 Insert test result data in O+M manuals.

3.3 AS-BUILT INFORMATION

.1 All breaker information shall be provided on the as-built drawings.

.2 Provide:

.1 equipment locations,

.2 equipment identification for reference to shop drawings,

.3 additional installation detail(s) as required to document the installation.

END OF SECTION

PART 1 - GENERAL

1.1 PRODUCT DATA

.1 Submit product data in accordance with Section 26 05 01.

1.2 O&M DATA

.1 Submit 4 copies of appropriate O&M data including data sheets for all equipment as well as manufacturers recommended maintenance procedures. All data to be 8½ x 11" format.

PART 2 - PRODUCTS

2.1 EQUIPMENT

.1 Enclosed manual air break switches in non-hazardous locations: to CSA C22.2 No. 4-1974.

.2 Fuse holder assemblies to CSA C22.2 No. 39-1972.

.3 Fusible and non-fusible disconnect switch in CSA enclosure.

.4 Provision for padlocking in "off" switch position.

.5 Fuses as indicated.

.6 Fuse holders in each switch suitable without adaptors, for type of fuse as indicated.

.7 Quick-make, quick-break action.

.8 "On/Off" switch position indication on switch enclosure cover.

.9 Weatherproof as required.

.10 Sprinkler proof in sprinklered areas.

2.2 BACKBOARDS

.1 All surface mounted disconnect switches to be mounted on 19 mm G1S painted plywood backboards. Paint to be fire retardant grey colour.

2.3 EQUIPMENT IDENTIFICATION

.1 Indicate name of load controlled with a lamicoid label.

2.4 MANUFACTURERS

.1 Acceptable manufacturers: Cutler Hammer, Siemens, Schneider or approved equal.

PART 3 - EXECUTION

3.1 INSTALLATION

.1 Install disconnect switches complete with fuses where indicated.

.2 Inspect and test equipment prior to application of power to the switches. Record inspection and test results.

3.2 TESTING

.1 Provide contractor testing as specified in section 26 05 04- "Contractor Testing".

.2 Insert test result data in O&M manuals.

3.3 AS-BUILT INFORMATION

.1 All disconnect switch information shall be provided on the as-built drawings.

.2 Provide:

- .1 equipment locations,
- .2 equipment identification for reference to shop drawings,
- .3 seismic restraint system where applicable,
- .4 additional installation detail(s) as required to document the installation.

END OF SECTION

PART 1 - GENERAL

1.1 SHOP DRAWINGS

.1 Submit shop drawings in accordance with Section 26 05 01.

1.2 SCOPE OF WORK

.1 Provide all controls and connections as required for power supply and control on the heat trace system(s)

.2 all components of the heat trace system must be manufactured by the same supplier.

.3 It is the responsibility of Division 26 to coordinate with Division 23 specifications for heating cable requirements. Control equipment is to match heating cable manufacturer or be an approved equal.

PART 2 – PRODUCTS

2.1 PIPE TRACING HEATING CABLES

.1 Heat trace cable and controls supplied and installed by Division 26.

.2 Heat trace cable to be self-regulating.

.3 Pipe insulation supplied and installed by Division 23.

.4 Heat trace megger testing by Division 26.

.5 Heat trace controls and accessories including temperature sensors, splice kits and end kits are supplied by the same manufacturer as the heating cable. Coordinate material and equipment supply with Division 23. Division 26 to make allowance in bid price to supply al controls and accessories for the heat trace cabling system.

.6 Product Standard of acceptance: Urecon C7-120 COJ.

2.2 CONTROLS

.1 Thermostat control and switch control as shown on the drawings, and as required by code.

.2 Three point controller: Low Temp alarm, High Temp alarm and Control Temperature.

.3 Thermostat controller by same manufacturer as heat trace product.

.4 Provide control boxes as detailed on the drawings sized to suit equipment supplied.

.5 All control wiring minimum #14 stranded wire.

2.3 OVER-CURRENT DEVICES

.1 All heat trace breakers to be ground fault type with minimum 30mA sensitivity. supply and install breakers as required. Controllers with integral 30mA trip acceptable in place of GFEPD breakers.

PART 3 - EXECUTION

3.1 INSTALLATION

.1 Install complete operational system including pilot lights.

.2 Ensure that manufacturers recommendations and installation guides are followed.

.3 Make all power and control connections as required.

.4 Heat trace not to be installed in contact with flammable materials.

.5 Local thermostat sensor as the drawings detail and as per manufacturers recommendations.

.6 Label all terminations, thermostats, switches and controllers.

3.2 CONTROLS

.1 Mount controls in weatherproof boxes on wall as shown. Alternatively, with the approval of the Departmental Representative mount the controls in an inconspicuous location in the building.

.2 Temperature setting to the approval of the mechanical Departmental Representative. Contractor to confirm temperature setting requirements with the mechanical Departmental Representative. Temperature settings to be included in the O&M manuals.

3.3 INSPECTION

.1 Departmental Representative or Departmental Representative's representative to witness the placement of the sensing bulbs and heat trace cabling before cover.

3.4 TESTING

.1 Perform tests in accordance with Section 26 42 10.

.2 Use 500 V megger to test cables for continuity and insulation value and record reading before, during and after installation.

.3 Perform 500V megger test of each line to ground. Perform other test as recommended by the manufacturer.

.4 Where resistance values of 50 mega ohms or less are measured, stop work and advise the Departmental Representative.

.5 Record results. Keep on file for Departmental Representatives review.

3.5 O&M MANUALS

.1 One copy of the test results to be placed in the O&M manuals.

.2 One copy of manufacturers recommendations on the installation to be included in the manuals.

END OF SECTION

PART 1 - GENERAL

1.1 RELATED WORK

.1 Common Work Results Electrical Section 26 05 01.

1.2 SHOP DRAWINGS AND PRODUCT DATA

.1 Submit shop drawings in accordance with Section 26 05 01.

1.3 FIXTURE CATALOGUE REFERENCE

.1 The fixture catalogue numbers listed may not include all required accessories to provide a complete installation of the fixtures as intended or as required. The description of each fixture should be carefully read prior to quoting the Tender price and shall include all such necessary accessories and characteristics. The Contractor shall be entirely responsible for furnishing all lighting requirements shown on the drawings and as specified.

1.4 SCOPE OF WORK

.1 Provide lighting fixtures and accessories for all outlets as listed in the fixture schedule, as shown on drawings, and as required to provide a complete lighting system for the ECCC Enforcement Garage.

.2 Lighting fixtures shall be structurally well-designed and constructed, using new parts and materials of the highest commercial grade available.

.3 Ground all lighting equipment to the grounding system.

.4 Verify all ceiling types and finishes before ordering fixtures and provide fixtures suitable for mounting in or on ceilings being installed in each area, as specified. Where fixture types specified are not suitable for ceiling being installed, obtain written instruction from the Departmental Representative before ordering fixtures.

.5 Install seismic restraint on all fixtures. Installation detail as per BC Electrical Contractors Association Seismic Restraint Manual, 1st Edition.

.6 Provide lighting control as indicated on the drawings, in the fixture schedule and as described in the specifications.

1.5 ALTERNATE FIXTURES

.1 Fixtures specified indicate the design standard requirements. Fixtures which entirely meet or exceed the design standard, at the discretion of the Departmental Representative and to the approval Departmental Representative, shall be considered as an alternate equivalent. At any time after close of tender the Departmental Representative finds that the alternate equivalent does not perform or provide the electrical, lighting output or architectural equivalence to the specified fixture, the Contractor shall provide and bear all costs to provide the specified fixture.

PART 2 - PRODUCTS

2.1 MOUNTING HARDWARE

.1 Division 26 to provide all factory hardware as required for suspended fixtures.

.2 Suspension method as per drawing details and manufacturers requirements

and recommendations.

.3 Provide shop drawings for all mounting hardware.

2.2 LAMPS

.1 As per fixture schedule and to match fixtures.

.2 All high pressure sodium and metal halide lamps to be coated, unless otherwise called for in fixture schedule.

2.3 LUMINARIES

.1 Fixtures as shown on fixture schedule and as specified.

2.4 BALLASTS

.1 All ballasts shall have power factor correction to 90% or more.

.2 Ballasts as per fixture schedule and as specified.

.3 Fluorescent ballasts shall be instant start electronic ballasts, equipped with thermal overload protection and 10% or less Total Harmonic Distortion (>10% THD).

.4 H.I.D. ballasts to be high power factor, epoxy encased "super quiet" ballast assemblies for all ballast-mounted interior fixtures.

.5 All ballasts on exterior fixtures to be rated -30° C.

2.5 GUARANTEE

.1 Replace ballasts that fail or exceed their original noise level rating within 12 months of substantial completion.

.2 Replace any lamps that fail within 3 months of substantial completion.

2.6 LIGHTING CONTROL

.1 As shown on the drawings and as specified.

.2 Reference section 26 09 24 "Lighting Control Devices - low voltage".

PART 3 - EXECUTION

3.1 INSTALLATION

.1 Locate and install luminaries as indicated. Luminaire locations in mechanical rooms to suit mechanical systems layout; provide fixture hangers and fixture layout to suit the mechanical equipment and to provide a illumination for the complete room.

.2 Install T-Bar fixtures at locations shown.

.3 Short section of AC90 where concealed behind architectural finishes is acceptable for single fixture drops. Using AC90 fixture to fixture is not acceptable.

.4 All fixtures in straight rows, parallel to building lines and as shown on the drawings.

.5 Make connections to lighting control as specified in section 26 09 24, as

detailed in this section and as detailed on the drawings.

3.2 WIRING

.1 Connect luminaries to lighting circuits as shown and as required.

.2 Ensure that installed lighting circuit ampacities are suitable for wiring gauge and over-current protection. Where required for voltage drop increase conductor gauge and conduit sizing to suit.

.3 Provide 2 wire circuits for all fluorescent and all HID lighting; sharing neutral conductors is not acceptable.

.4 Provide manual lighting control locations as shown and as required.

.5 Provide automatic lighting control and integration to other control systems as shown and as specified.

3.3 TESTING

.1 Provide contractor testing as specified in section 26 05 04 - "Contractor Testing".

.2 Insert test result data in O+M manuals.

3.4 AS-BUILT

.1 All lighting system information shall be provided on the as-built drawings.

.2 Provide:

.1 equipment locations,

.2 equipment identification for reference to shop drawings,

.3 seismic restraint system,

.4 cabling and wiring information including wire labels and designators,

.5 additional installation detail(s) as required to document the installation.

END OF SECTION

PART 1 - GENERAL

1.1 PRODUCT DATA

.1 Submit product data in accordance with Section 26 05 01.

.2 Data to indicate system components, mounting method, source of power and special attachments.

1.2 SCOPE OF WORK

.1 Provide a complete emergency lighting system including of independent unit emergency battery supplies and emergency lighting fixtures to provide emergency lighting in the event of loss of normal power supply to the ECCC Enforcement Garage.

.2 Provide system testing, operator training and system documentation as specified.

.3 Provide surge suppression receptacles for the electrical room and generator room battery packs.

PART 2 - PRODUCTS

2.1 EQUIPMENT GENERAL

.1 Supply voltage: to match lighting voltage.

.2 Output: 24 V DC with unit battery pack output wattage as shown on the drawings and as specified.

.3 In an area covered by an emergency lighting device, the emergency lighting must activate upon failure of any lighting circuit to that area. Reference CSA C22.1 section 46-304(4). Installation to the approval of the Departmental Representative.

.4 Operating time:
.1 general: 30 minutes

.5 Battery: sealed, long life, lead acid maintenance free.

.6 Charger: fully automatic, current and voltage limited, inverse temperature, solid state, short-circuit protected.

.7 Battery recharge time of 24 hours.

.8 The unit shall have a full function auto test and auto diagnostic system. It shall automatically perform 5 minute discharge tests monthly and every 6 months it shall run two 30 minute discharge tests, 24 hours apart. It will test both full battery capacity and recharge capability, as required by the Fire Code. The self-diagnostic circuit shall warn of a problem, including low battery capacity. It shall indicate malfunction by means of status indicator lights which change colour. Battery or charger malfunction is indicated by a red LED. A yellow LED shall indicate lamp circuit malfunction. Two green LED's illuminated shall indicate proper operating status, and unit in boost charge mode. One green LED on shall indicate normal operation "OK" and

unit in float charge mode.. All units shall have a manual test switch for testing after maintenance. The system shall also include an automatic 10-minute time delay function to allow for HID lighting to warm-up and restrike.

.9 Solid-state transfer (up to 9 amp load) Sealed transfer relay for loads of 10 to 30 amps.

.10 Low voltage disconnect: solid state, operates at 80% battery output voltage.

.11 Signal lights: solid state, life expectancy 100,000 h minimum for "AC power ON" and "High Charge".

.12 Lamp heads: integrated on unit 360 deg. Horizontal and 180 deg. Vertical adjustment. Fixture shall be die cast construction. Lamp type: LED Emergency MR16 style Rated 5W or 6W or 9W;lamp wattage as indicated on the fixture schedule and as shown on the drawings.

.13 Cabinet: suitable for direct mounting to wall or shelf mounting. Cabinet constructed of steel with removable front panel for easy access to batteries.

.14 Finish: Standard colour: white. Baked enamel finish.

.15 Auxiliary equipment:
- .1 Test switch
- .2 Mounting shelf complete with seismic rating.

.16 Approvals: The complete unit shall be CSA C22.2 No.141 approved.

.17 Remote Heads:
- .1 Single or double adjustable heads as indicated.
- .2 Wall or ceiling mounted as indicated on the drawings.
- .3 LED MR16 fixture, die cast construction. Lamp type: LED Emergency rated MR16 style. Lamp wattage as indicated on the drawings and in the fixture schedule.

2.2 PRODUCT

.1 Unit Equipment Design Standard: Ready-lite LDX Series. Voltage to coincide with Remote head voltage. Unit wattage capacity as shown on the drawings.

.2 Remote Head Design Standard: Ready-lite RM Series; and as indicated on the fixture schedule. Typically all white. All black where indicated.

2.3 OPERATION

.1 Emergency lighting shall illuminate on normal utility power failure to the building and on power failure to lighting circuits as shown on the drawings. Provide a complete and operational system.

2.4 WIRING OF REMOTE HEADS AND EXIT LIGHTS

.1 Wiring methods as per Section 26 05 21 "Wires and Cables 0-1000V".

.2 Minimum wire size: #10 AWG. Voltage drop not to exceed 5% from battery pack to the furthest remote head in the circuit. Contractor to provide wiring

as required for less than 5% voltage drop from battery pack to the furthest remote head.

PART 3 - EXECUTION

3.1 INSTALLATION

.1 Install unit equipment for emergency lighting in accordance with CSA C22.2 - 141.

.2 Install conduit and wiring as indicated. Receptacles to which unit equipment is to be connected shall be not less than 2.5 m above the floor, where practicable, and shall be not more than 1.5 m from the location of the unit equipment. This applies to 120 volt equipment. 347 volt equipment shall be permanently connected.

.3 Unit equipment shall be installed in such a manner that it will be automatically actuated upon failure of the power supply to the normal lighting in the area covered by that unit equipment.

.4 The emergency lighting equipment shall be supplied by the circuits indicated on the panel schedule. Label circuits supplying emergency lighting units at the panel and install a lock on device on these circuits to prevent accidental interruption of the supply to the units.

.5 Install unit equipment and remote mounted fixtures as indicated.

.6 Cut and re-cap cord to remove surplus. (where applicable)

.7 Direct heads as indicated.

.8 Mount double remote heads on outlet box such that the two heads will be horizontal with the building lines.

.9 Charge the batteries and test the system for proper operation. Minimum run time as per requirements of Canadian Building Code.

.10 The circuit conductors to remote lamps shall be of such size that the voltage drop from the lamp connections terminals to the lamp load does not exceed 5%. Comply with section 5.2 of CSA C22.2 - 141.

3.2 TESTS

.1 Measure and record DC output voltage of each battery pack while AC power is disconnected to battery pack.

.2 Measure and record DC input voltage to each remote head while AC power is disconnected to associated battery pack. Note tests to be performed with all remote heads and exit lights in connected circuit energized - full connected battery load.

.3 Test results to be submitted in the O+M manuals.

.4 Test operation of normal utility power to the building failure (main service switch) and each specified power failure to lighting circuits as shown on the

drawings. Include test results in O+M manuals.

3.3 AS-BUILT INFORMATION

.1 All unit equipment and emergency lighting system information shall be provided on the as-built drawings.

.2 Provide:

.1 equipment locations,

.2 equipment identification for reference to shop drawings,

.3 seismic restraint system,

.4 cabling and wiring information including wire labels and designators,

.5 additional installation detail(s) as required to document the installation.

END OF SECTION

PART 1 - GENERAL

1.1 GENERAL INSTRUCTIONS

.1 This section of the specification forms a part of the Contract Documents and is to be read, interpreted and coordinated with all other parts.

1.2 RELATED WORK

.1 General Requirements: Section 26 05 01

.2 Maintenance Manuals: Section 26 05 08

.3 Contractor Testing: Section 26 05 04

PART 2 - PRODUCTS

2.1 SCOPE

.1 Provide on-site demonstration of all electrical systems to the owner and the owner's representatives.

.2 Provide on-site operating instructions of all provided electrical systems to the owner and the owner's representatives.

.3 Division 26 to designate a senior experienced individual fully familiar with the project to coordinate and chair each demonstration and instruction session.

.4 Division 26 Contractor shall be responsible for keeping a 'Demonstration and Instructions of Electrical Systems' Record Log. Include Record Log copies of each session in each electrical operations and maintenance manual.

.5 Division 26 Contractor to make allowance in tender price to provide a minimum of 2, 4 hour sessions for demonstration and training of Owner designated personnel.

PART 3 - EXECUTION

3.1 SITE TOURS

.1 Provide a Contractor guided walk-through tour to allow Owner designated personnel to familiarize themselves with all provided electrical systems.

.2 Coordinate timing of demonstrations and instructions with the Owner to ensure that designated personnel have a minimum of five (5) working days notice prior to conducting each demonstration and instruction session. Follow all additional instructions in the general contract.

.3 Division 26 to keep a log of all site tour demonstration and instruction sessions conducted. Log shall include tour date, persons and firms represented and names, signatures and comments to those present. Copies of same shall be tabulated and included in electrical operations and maintenance manuals, with demonstration log sheets.

.4 The Contractor shall provide the on-site services of all sub-trade designates to demonstrate and instruct the Owner's personnel in the specialized

systems. The sub-trade designates shall be senior personnel fully trained and competent in the installation and in the operation of the system.

3.2 SYSTEMS INCLUDED IN ELECTRICAL DEMONSTRATION AND INSTRUCTION

.1 Unless otherwise indicated, provide sessions in Electrical to fully demonstrate and familiarize the owner and the owner's representatives with electrical systems, electrical operations and the general maintenance requirements for all provided electrical systems.

.2 Operations and Maintenance Manuals shall be used on-site for all demonstration and instruction sessions.

.3 Where demonstration and instructions sessions show that additional work or information is necessary to provide a complete and useable Maintenance Manual for user and maintenance staff, the Contractor shall provide the necessary changes and resubmit the O+M manuals for Departmental Representative's review prior to the Contractor's manuals turn over to the Owner.

.4 Systems Include:

- .1 Maintenance Manuals
- .2 Disconnect switches
- .3 Surge protection equipment
- .4 Panelboards
- .5 Contactors
- .6 Lighting fixtures and control
- .7 Exit and emergency lighting
- .9 Fire alarm
- .10 Data and voice
- .11 Motors and starters
- .12 Generator
- .13 Transfer Switch
- .14 Intrusion detection system

END OF SECTION

1. General

1.1 RELATED REQUIREMENTS

.1 Read this Section in conjunction with:

.1 Earthwork General Requirements: Section 31 20 10.
.2 Other Sections which specify the location, use or placement of fill materials.

.2 This Section is intended to be used as a reference Section; it is not a "section of work". All materials specified in Part 2, Products, may not necessarily be required.

.3 Refer to other Sections for location, use, and placement of fill materials specified herein.

1.2 REFERENCE DOCUMENTS

.1 All Code and Standard references are referring to current updates, revisions, and adjustments in effect as of date of bid closing.

.2 Canadian Standards Association (CSA):

.1 CAN/CGSB-8.2 Sieves, Testing, Woven Wire, Metric

.3 Specified sieve sizes are based on the nominal sieve opening sizes, in millimetres, under the Canadian Metric Sieve Series, as contained in Table 1 of CAN/CGSB-8.2.

1.3 SOURCE OF SUPPLY - IMPORTED FILL MATERIALS

.1 For bidding purposes, assume that only fill materials which fully meet specified requirements, including gradations, may be used, regardless of proximity to the Place of the Work of sources of supply for such materials.

1.4 SOURCE OF SUPPLY - NATIVE EXCAVATED MATERIAL

.1 For bidding purposes, assume that where Native Excavated Material is specified to be used, only native material required to be excavated under this Contract.

.2 For bidding purposes, assume that where Native Excavated Material is specified to be used, sufficient quantities of such material, meeting specified requirements and acceptable to Owner, will be available for use.

.3 Notify Owner if sufficient quantities of the Excavated Material, meeting specified requirements and acceptable to Owner, are not available for use where such material is specified to be used. Provide imported fill materials in lieu of Native Excavated Material, if and as directed by Owner.

.4 Provision of imported fill materials where Native Excavated Material is specified to be used, will, if directed by Owner, be considered a change in the Work and will be valued in accordance with the General Conditions of Contract.

2. Products

2.1 AGGREGATE QUALITY, GENERALLY

.1 Aggregate fill materials shall be comprised of clean, sound, hard particles, and be free from silt, clay, soft shale, flaky particles, organic matter and foreign substances.

2.2 GRAVEL FILL MATERIAL

.1 Gravel: Pit Run sub-base as specified in Geotechnical Report or City of Whitehorse Servicing Standards Manual (latest edition).

2.3 CRUSHED GRAVEL FILL MATERIAL

.1 Crushed Gravel: Granular Base as specified in Geotechnical Report or City of Whitehorse Servicing Standards Manual (latest edition).

2.4 WASHED OR SCREENED GRAVEL FILL MATERIAL

.1 Washed or screened Gravel: Drain Rock as specified in Geotechnical Report or City of Whitehorse Servicing Standards Manual (latest edition).

2.5 WASHED OR SCREENED CRUSHED GRAVEL FILL MATERIAL

.1 Washed or screened Crushed Gravel: Drain Rock as specified in Geotechnical Report of City of Whitehorse Servicing Standards Manual (latest edition).

2.6 SAND FILL MATERIAL

.1 Sand: Bedding Sand as specified in Geotechnical Report or City of Whitehorse Servicing Standards Manual (latest Edition).

2.7 EARTH FILL MATERIAL

.1 Native Excavated Material: Clean, native excavated soil, free from organic matter, frozen materials, stones larger than 75 mm, building debris and other foreign substances.

.2 Imported Clay: inorganic fine grained soil, free from organic matter, stones larger than 50 mm, building debris, and other foreign substances.

3. Execution

3.1 PLACEMENT

.1 Refer to other Sections for location, use, and placement of fill materials specified herein.

END OF SECTION

1. General

1.1 INTENT

.1 This Section specifies general requirements common to all earthwork. Read this Section in conjunction with related Sections which specify requirements for specific types of earthwork.

1.2 RELATED REQUIREMENTS

.1	Changes in Sub-Surface Conditions:	General Conditions of Contract.
.2	Subsurface Soils Information:	Division 00 or Geotechnical Report.
.3	Fill Materials:	Section 31 05 13.

1.3 REFERENCE DOCUMENTS

.1 All Code and Standard references are referring to current updates, revisions, and adjustments in effect as of date of bid closing.

.2 Canada Green Building Council (CaGBC)

.1 LEED Canada 2009 Rating System, LEED Canada for New Construction and Major Renovations. LEED Canada for Core and Shell Development. Website: www.cagbc.org.

1.4 DEFINITIONS

.1 Earthwork: Earthwork means excavating of all types, backfilling, filling, compacting, grading and related work.

1.5 CLASSIFICATION OF EXCAVATION

.1 The following classifications of excavation will be made when solid rock, rock in ledges, rock-hard cementitious aggregate deposits, large boulders or other similar obstructions are encountered:

.1 Earth Excavation.
.2 Rock Excavation in Trenches and Pits.
.3 Rock Excavation in Open Excavations.

.2 "Earth Excavation" includes:

.1 Removal and disposal of obstructions, the extent of which is visible on ground surface.

.2 Removal and disposal of underground structures and utilities, the extent of which is indicated, reflected or referred to in the Contract Documents.

.3 Removal and disposal of earth and other materials encountered, of any classification, except rock as defined below.

.3 "Rock Excavation in Trenches and Pits" includes:

.1 Removal and disposal of materials and obstructions encountered which cannot be dislodged and excavated with a Caterpillar Model No. 215C LC equipped with a short stick and a 1070 mm wide rock bucket, or equivalent modern, track-mounted power excavator, rated at not less than 86 kW flywheel power and 142 kN drawbar pull, without prior drilling or blasting.

.2 Trenches in excess of 3 m in width and pits in excess of 9 m in either length or width will be classified as open excavation.

.4 "Rock Excavation in Open Excavations" includes:

.1 Removal and disposal of materials and obstructions encountered which cannot be dislodged and excavated with a Caterpillar Model No. 973 or equivalent modern, track-mounted, heavy-duty, excavating equipment rated at not less than 157 kW flywheel power and 183 kN breakout force (with rock bucket) without prior drilling, blasting or ripping.

.5 Intermittent drilling, blasting or ripping performed to increase production and not necessary to perform the Work, will be classified as earth excavation.

1.6 BASIS OF EXCAVATION

.1 For bidding purposes, assume that all excavation work will be "Earth Excavation".

.2 Rock encountered within areas requiring excavation and classified by Geotechnical Engineer as "Rock Excavation in Trenches or Pits" or "Rock Excavation in Open Excavations", will be considered a change in the Work and valued in accordance with the General Conditions of Contract.

1.7 UNAUTHORIZED EXCAVATION

.1 Unauthorized excavation shall be any excavation beyond elevations and dimensions indicated, without specific direction by Owner.

.2 Fill unauthorized excavation to elevations and dimensions indicated, as directed by Owner.

.3 Unauthorized excavation and remedial work shall be at Contractor's expense.

1.8 EXCAVATION LEVELS

.1 For bidding purposes, assume that excavation levels will be as indicated on Drawings.

.2 Notify Owner if unsuitable bearing materials are encountered at indicated elevations. Carry excavation deeper and replace excavated material with suitable materials if and as directed by Owner.

.3 Notify Owner if bearing conditions are fulfilled at elevations above those indicated. Adjust excavation elevations if and as directed by Owner.

.4 Adjustments in levels, if directed by the Owner, will be considered a change in the Work and will be valued in accordance with the General Conditions of Contract.

2. Products

2.1 FILL MATERIALS

.1 Refer to Section 31 05 13 for fill material product specifications.

3. Execution

3.1 PREPARATION

.1 Notify Owner minimum 2 days prior to beginning excavating operations.

.2 Prior to commencing excavation:

.1 Contact all affected utility companies regarding exact location and current status of all utilities, voltage of underground and overhead power lines and pressure of natural gas lines.

.2 Notify Owner if any utility lines have been omitted from or incorrectly indicated on Drawings.

.3 Identify known underground utilities. Stake and flag locations. Identify and flag surface and aerial utilities.

.4 Notify utility company to remove and relocate utility lines.

.3 Expose building connections, service connections, and utilities to be crossed to confirm horizontal and vertical alignment of existing utilities.

.4 Expose existing utility lines by hand excavation to confirm location before machine digging within 600 mm of lines.

.5 Maintain and protect existing above and below grade utilities which pass through work area. Protect active utility lines exposed by excavation, from damage. Hand excavate to final elevations and dimensions.

.6 Where existing pipes, ducts or other underground services intersect a trench, support trench in a manner approved by Utility.

.7 Where existing overhead line poles are adjacent to excavations, temporarily support poles in a manner approved by Utility.

3.2 SHORING AND BRACING

.1 If required to provide safe working conditions and to prevent cave-ins and loose soil from falling into excavations, protect excavations by shoring, bracing, sheet piling, underpinning, or other suitable methods.

.2 Underpin adjacent structures which may be damaged by excavation work, including service utilities and pipe chases or cuts.

3.3 DEWATERING

.1 Maintain excavations free of water. Provide pumps, piping, temporary drains, trenches, sumps, and related equipment to remove water.

.2 Do not use sanitary sewers or direct discharge to river for discharge of water. Contain discharge on site to the extent possible. Use discharge sumps, excavated large enough to contain discharge.

3.4 EXCAVATING

.1 Strip topsoil from areas to be excavated or filled.

.2 Do not excavate under wet conditions or when such conditions are anticipated. If necessary maintain adequate erosion and sediment control.

.3 When excavating is necessary through roots of plant materials, which are to remain, perform work by hand and cut roots with a sharp axe.

3.5 MATERIAL STORAGE

.1 Excavated topsoil, acceptable and required for use under this Contract: Stockpile on site until required.

.2 Native excavated material, other than topsoil, acceptable and required for use as fill material under this Contract: Stockpile on site until required.

.3 Stockpile locations shall be subject to Owner's approval.

3.6 DISPOSAL OF EXCESS AND WASTE MATERIAL

.1 Excavated topsoil, acceptable but in excess of that required for use under this Contract: Remove from site. Excess topsoil removed from site shall become Contractor's property.

.2 Native excavated material, other than topsoil, acceptable but in excess of that required for use as fill material under this Contract: Remove from site.

.3 Unacceptable excavated topsoil, unacceptable native excavated material, waste material, trash and debris: Remove from site and ensure proper disposal.

3.7 BACKFILLING

.1 Ensure areas to be backfilled are free of debris, snow, ice, water and that surfaces are not frozen. Do not backfill over porous, wet, or spongy subgrade surfaces.

.2 Backfill systematically, as early as possible, to allow maximum time for natural settlement.

3.8 COMPACTION

.1 Compact fill materials using only mechanical methods. Do not use hydraulic methods.

.2 Do not perform compaction using vehicles and other equipment not designed for compacting.

.3 Maintain optimum moisture content of materials being compacted, as required to attain specified compaction density.

END OF SECTION

1. General

1.1 RELATED REQUIREMENTS

.1 Read this Section in conjunction with:

.1 Fill Materials: Section 31 05 13.
.2 Earthwork General Requirements: Section 31 20 10.

1.2 SECTION INCLUDES

.1 This Section includes requirements for all excavating, backfilling, filling, compacting and grading outside perimeter of buildings or structures, except:

.1 building and structures excavating and backfilling,

.2 trench excavating and backfilling, and

.3 granular base construction for paving and surfacing.

1.3 REFERENCE DOCUMENTS

.1 All Code and Standard references are referring to current updates, revisions, and adjustments in effect as of date of bid closing.

.2 Canada Green Building Council (CaGBC)

.1 LEED Canada 2009 Rating System, LEED Canada for New Construction and Major Renovations. LEED Canada for Core and Shell Development. Website: www.cagbc.org.

1.4 LEED REQUIREMENTS

.1 SS Prerequisite 1 – Construction Activity Pollution Prevention:

.1 Objectives: reduce pollution from construction activities by controlling soil erosion, waterway sedimentation and airborne dust generation.

.2 Requirements: create and implement an erosion and sedimentation control plan for the Project as outlined in the LEED Rating System.

2. Products

2.1 FILL MATERIALS

.1 Refer to Section 31 05 13 for fill material product specifications.

3. Execution

3.1 EXCAVATION

.1 Excavate to elevations and dimensions indicated on Drawings within a tolerance of plus or minus 50 mm.

3.2 PLACEMENT AND COMPACTION OF FILL MATERIALS

.1 Backfill excavations and fill to required subgrade elevations using fill materials specified.

.2 Place fill materials in layers not exceeding loose thickness specified.

.3 Compact each layer of fill to minimum percentages of Standard Proctor Density specified.

3.3 GRADING

.1 Make changes in grade natural. Blend slopes into level areas.

.2 Unless otherwise indicated on Drawings, slope grade away from building minimum 1:20.

.3 Grade and shape surfaces within following tolerances from subgrade elevations indicated on Drawings:

.1 Landscaped areas: plus or minus 50 mm.
.2 Under paved areas: plus or minus 10 mm.
.3 Under sidewalks: plus or minus 10 mm.

3.4 SITE FILLING SCHEDULE

.1 As specified in Geotechnical Report or City of Whitehorse Servicing Standards Manual (latest edition).

END OF SECTION

1. General

1.1 RELATED REQUIREMENTS

.1 Read this Section in conjunction with:
- .1 Fill Materials: Section 31 05 13.
- .2 Earthwork General Requirements: Section 31 20 10.

1.2 RELATED SECTIONS

.1 Mechanical and Electrical Service Connections: Division 01.
.2 Pipe bedding for mechanical services: Division 22.
.3 Pipe bedding for electrical services: Division 26.
.4 Pipe bedding for pipe utility systems: Section 33 05 10.

1.3 SECTION INCLUDES

.1 This Section includes requirements for excavating, backfilling, and compacting trenches required for installation of underground services, occurring within and outside perimeter of buildings or structures. Underground services may include pipes, ducts, ductbanks, conduits, cable and wire.

1.4 COORDINATION

.1 Coordinate work specified in this Section with pipe bedding and other related work specified in other Sections.

2. Products

2.1 FILL MATERIALS

.1 Refer to Section 31 05 13 for fill material product specifications.

3. Execution

3.1 EXCAVATION

.1 Excavate trenches to alignment and depth indicated or required and to uniform width, sufficiently wide to provide adequate working room. For pipe trenches, comply with Pipe Trench Width Schedule.

.2 Grade and shape pipe trench to give uniform and even bearing for each length of pipe. Dig bell holes at each joint as required.

3.2 PLACEMENT AND COMPACTION OF FILL MATERIAL

.1 Backfill trenches using fill materials as specified in Backfilling Schedule.

.2 Place fill materials in layers not exceeding loose thickness specified in Backfilling Schedule.

.3 Uniformly compact each layer of fill to minimum percentages of Standard Proctor Density specified in Backfilling Schedule.

.4 Use care in backfilling to avoid damage or displacement of services.

3.3 UTILITY CROSSINGS

.1 Install crossings as indicated on Drawings.

.2 Comply with requirements of crossing permit issued by utility company and requirements of utility company.

3.4 PIPE TRENCH WIDTH

.1 Except as otherwise specified, minimum and maximum trench widths, up to a point 300 mm above top of pipe or top of highest pipe in the case of multiple pipes, shall be as specified in Pipe Trench Width Schedule.

.2 Maximum trench widths indicated in Pipe Trench Width Schedule exclude an allowance for shoring.

.3 Minimum trench width for "Rock Excavation in Trenches" shall be 1 m.

.4 Trench width at any point shall not be less than trench width at any depth below such point.

3.5 PIPE TRENCH WIDTH SCHEDULE

No. of Pipes	Minimum Trench Width	Maximum Trench Width
Single pipe, 850 mm diameter or less	300 mm greater than external pipe diameter	450 mm greater than external pipe diameter or 750 mm total trench width, whichever is greater
Single pipe, greater than 850 mm diameter	300 mm greater than external pipe diameter	600 mm greater than external pipe diameter
Multiple pipes, side by side	300 mm greater than horizontal dimension across outer edges of pipes	600 mm greater than horizontal dimension across outer edges of pipes

3.6 BACKFILLING SCHEDULE

.1 As specified in Geotechnical Report or City of Whitehorse Servicing Standards Manual (lastest edition).

END OF SECTION

1. General

1.1 SECTION INCLUDES

.1 This Section includes requirements for:

.1 Subgrade preparation for granular base construction.
.2 Sub-base and base course construction for asphalt paving.
.3 Sub-base and base course construction for gravel surfacing.
.4 Restoration of existing gravel surfacing.

1.2 RELATED REQUIREMENTS

.1	Fill Materials:	Section 31 05 13.
.2	Earthwork General Requirements:	Section 31 20 10.
.3	Asphalt Paving:	Section 32 12 16.

1.3 REFERENCE DOCUMENTS

.1 All Code and Standard references are referring to current updates, revisions, and adjustments in effect as of date of bid closing.

.2 American Society for Testing and Materials (ASTM):

.1 ASTM D698 — Standard Test Method for Laboratory Compaction Characteristics of Soil Using Standard Effort (600kN-m/m^3).

1.4 PROTECTION

.1 Restrict traffic over completed or partially completed work after inclement weather or at any time when there is tendency for subgrade material to work into base material.

1.5 DELIVERY, STORAGE AND HANDLING

.1 Separate waste materials for reuse and recycling in accordance with Division 01 – Waste Management and Disposal.

2. Products

2.1 MATERIALS

.1 Refer to Section 31 05 13 for granular fill material products.

3. Execution

3.1 SUBGRADE PREPARATION

.1 As specified in Geotechnical Report or City of Whitehorse Servicing Standards Manual.

.2 In excavated areas, where fill material depth will be 100 mm or less, scarify subgrade to depth of 150 mm.

.3 Ensure that required subgrade elevations are maintained upon completion of subgrade preparation.

3.2 SUB-BASE COURSE CONSTRUCTION

.1 Place sub-base course as specified in Geotechnical Report or City of Whitehorse Servicing Standards Manual.

.2 Place sub-base gravel course in continuous horizontal layers.

.3 Re-mix coarse aggregate with fines and work gravel to achieve required depth, grade and section.

.4 Apply water to sub-base gravel course uniformly and in sufficient quantities to obtain optimum moisture content for compaction.

.5 Grade sub-base gravel course to within 25 mm of design grade by blading and compacting.

3.3 BASE COURSE CONSTRUCTION

.1 Place base course as specified in Geotechnical Report or City of Whitehorse Servicing Standards Manual.

.2 Ensure that coarse aggregates and fine aggregates are well mixed.

.3 Place base gravel course in continuous horizontal layers.

.4 Apply water to base gravel uniformly and in sufficient quantities to obtain optimum moisture content for compaction.

.5 Grade base gravel course to within 10 mm of design grade by blading and compacting.

.6 Do not conceal manhole covers, valve covers or catch basin rims.

3.4 COMPACTION EQUIPMENT

.1 Use smooth drum or pad type vibratory roller for gravel compaction.

END OF SECTION

1. General

1.1 SECTION INCLUDES

.1 This Section includes requirements for asphalt concrete pavement over a granular base course. This Section does not include requirements for the base construction.

1.2 RELATED REQUIREMENTS

.1	Site Excavating, Filling and Grading:	Section 31 23 10.
.2	Granular Base:	Section 32 11 16.
.3	Asphalt Concrete Pavement Repairs:	Section 32 12 17.
.4	Pavement Markings:	Section 32 17 23.
.5	City of Whitehorse Servicing Standards Manual (latest edition)	

1.3 REFERENCE DOCUMENTS

.1 All Code and Standard references are referring to current updates, revisions, and adjustments in effect as of date of bid closing.

.2 American Society for Testing and Materials (ASTM):

.1	ASTM D242	Standard Specification for Mineral Filler for Bituminous Paving Mixtures.
.2	ASTM D692	Standard Specification for Course Aggregate for Bituminous Paving Mixtures.
.3	ASTM D946	Standard Specification for Penetration-Graded Asphalt Cement for Use in Pavement Construction.
.4	ASTM D979-01	Standard Practice for Sampling Bituminous Paving Mixtures.
.5	ASTM D995	Specification for Mixing Plants for Hot-Mixed, Hot-Laid Bituminous Paving Mixtures.
.6	ASTM D1073	Standard Specification for Fine Aggregate for Bituminous Paving Mixtures.
.7	ASTM D2027	Standard Specification for Cutback Asphalt (Medium-Curing Type).

.3 Canadian General Standards Board (CGSB):

.1	CAN/CGSB-8.2	Sieves, Testing, Woven Wire, Metric.

1.4 DETAIL DRAWING

.1 Not used.

1.5 SUBMITTALS

.1 Comply with requirements of Division 01.

.2 Submit mix design for pavement to Owner for approval, not less than three days prior to commencing paving.

1.6 MIXING PLANT QUALIFICATIONS

.1 Asphalt concrete mixing plants shall conform to ASTM D995.

1.7 TESTING AND INSPECTION

.1 The Contractor will engage the services of a testing agency to take samples and test them for conformance to this Section. Sampling will follow recommended practice of ASTM D979.

1.8 SEQUENCING AND SCHEDULING

.1 Sequence and schedule work so as to provide access to building(s) at all times. Arrange work so as not to interfere with normal use of premises.

1.9 DELIVERY, STORAGE AND HANDLING

.1 Separate waste materials for reuse and recycling in accordance with Division 01 – Waste Management and Disposal.

2. Products

2.1 BITUMINOUS MATERIALS

.1 Primer: to ASTM D2027, MC-30, or SS-1h to ASTM D977, Emulsiphied Asphalt.

.2 Asphalt Cement: to ASTM D946, penetration grade 150 - 200A.

2.2 AGGREGATE

.1 Aggregate shall consist of crushed stone, crushed gravel, sand, mineral filler, to ASTM D692 and ASTM D1073.

.2 Mineral filler may be portland cement, pozzolan, or commercially ground stone dust conforming to ASTM D242.

.3 A minimum of 60% of aggregate retained on the 5 mm sieve shall have at least one fractured face.

2.3 AGGREGATE GRADATION SCHEDULE

.1 Gradation of aggregate shall be as specified in Geotechnical Report or City of Whitehorse Servicing Standards Manual.

2.4 PAVEMENT MIXTURE

.1 Design and prepare hot-mixed or warm mixed, hot-laid or warm-laid pavement mixtures utilizing asphalt cement and aggregate as specified in Geotechnical Report or City of Whitehorse Servicing Standards Manual.

.2 Do not change approved mix design without written approval by the Owner.

2.5 ACCESSORIES

.1 Adjustment Rims: as required to adjust elevation of manhole rims and valve chambers.

3. Execution

3.1 EXAMINATION

.1 Examine prepared base before paving. Report any defects in base to Owner. Do not commence work if base is frozen or otherwise unsatisfactory.

3.2 PROTECTION OF EXISTING WORK

.1 Protect structures, buildings, sidewalks, landscaping and other surface features against damage caused by paving operations and asphalt spray.

3.3 PRIMER APPLICATION

.1 Apply primer at 0.90 - 1.50 litres per square metre.

.2 Allow primer to be absorbed completely by base surface.

3.4 PAVEMENT MIX AND PLACEMENT TEMPERATURES

.1 Mix and place asphalt concrete heated to temperatures between 121 - 163°C.

.2 Place pavement at ambient air temperatures at or above 2°C.

3.5 PAVING, GENERALLY

.1 Place pavement to elevations and grades indicated on drawings. 50 mm thickness, or as otherwise specified. Repair existing asphalt to match depth of existing surface.

.2 Uniformly grade pavement surfaces. Provide gradual transitions in slopes. Maximum surface depressions shall be 5 mm below a 3.0 m long straight edge.

.3 Compact pavement to minimum 98% of Marshall Design Density.

3.6 SINGLE LIFT PAVEMENT

.1 Place pavement in a single lift to a minimum total compacted thickness as specified in Geotechnical Report, City of Whitehorse Servicing Standards Manual or as shown on drawings.

.2 Maximum Aggregate Size: 12.5 mm or 16.0 mm.

3.7 TWO LIFT PAVEMENT

.1 Place pavement in two lifts as specified in Geotechnical Report.

.1 Base lift: 50 mm thickness.

.2 Surface lift: 50 mm thickness.

.3 Maximum Aggregate Size:

.1 Base Course: 12.5, 16.0 or 20.0 mm.
.2 Surface Course: 10.0, 12.5 or 16.0 mm.

3.8 PAVING AT CATCH BASINS, MANHOLES AND VALVES

.1 Ensure surface drainage to catch basins.

.2 Ensure that surface runoff will not drain into manholes and valve chambers.

.3 Do not pave over manholes or valve chambers. Adjust valve chambers and manhole rims to finished adjacent pavement elevation as indicated on drawings.

3.9 CLEAN-UP

.1 Remove loose pavement and aggregate from site.

.2 Remove all spillage and over-spray of liquid asphalt from pavement, sidewalks, buildings and other listed features.

.3 Clean out manhole pits and ensure free operation of valves after completion of paving operations.

3.10 PROTECTION OF COMPLETED WORK

.1 Keep vehicular traffic off newly paved areas until pavement surface temperature has cooled below 39°C. Do not permit stationary loads on pavement until 24 hours after placement.

END OF SECTION

1. General

1.1 RELATED REQUIREMENTS

.1 Fill Materials: Section 31 05 13.
.2 Site Excavating, Filling and Grading: Section 31 23 10.
.3 City of Whitehorse Servicing Standards Manual (latest edition).

1.2 REFERENCE DOCUMENTS

.1 All Code and Standard references are referring to current updates, revisions, and adjustments in effect as of date of bid closing.

.2 American Society for Testing and Materials (ASTM):

.1	ASTM A185/ A185M	Standard Specification for Steel Welded Wire Reinforcement, Plain, for Concrete.
.2	ASTM C295	Standard Guide for Petrographic Examination of Aggregates for Concrete.
.3	ASTM C309	Standard Specification for Liquid Membrane-Forming Compounds for Curing Concrete.
.4	ASTM D1751	Standard Specification for Preformed Expansion Joint Filler for Concrete Paving and Structural Construction (Nonextruding and Resilient Bituminous Types).

.3 Canadian Standards Association (CSA):

.1	CAN/CSA-A5	Portland Cement.
.2	CSA A23.1 / A23.2	Concrete Materials and Methods of Concrete Construction/ Methods of Test for Concrete.
.3	CAN3-A266.1	Air-Entraining Admixtures for Concrete.
.4	CSA A23.4	Precast Concrete - Materials and Construction.
.5	CSA G30.18	Carbon Steel Bars for Concrete Reinforcement.

1.3 DETAIL DRAWINGS

.1 Refer to Construction Drawings.

1.4 SUBMITTALS

.1 Comply with requirements of Division 01.

.2 Submit product literature for curing compound and sealer.

1.5 TESTING

.1 Contractor shall appoint and pay for services of testing agency to do the following:

.1 Test fine and coarse aggregate.

.2 Take three test cylinders from load, or fraction thereof, of each type of concrete placed in any one day. Test cylinders will be cured on job-site under same conditions as concrete it represents.

.3 Test one cylinder in 7 days and remaining two cylinders in 28 days.

.4 Take at least one slump test and one entrained air test for each set of test cylinders taken.

.5 Take one additional test cylinder when the temperature is likely to fall below 2°C within 48 hours after placement and no provisions have been made to heat the concrete to greater than 10°C. Test cylinder will be cured on job-site under same conditions as concrete it represents and to be tested in 7 days.

.6 Immediately report results of field tests to the Contractor, for information only.

.2 Submit the following to testing firm's laboratory:

.1 Proposed concrete mix design.

.2 Samples of fine and coarse aggregate, obtained in accordance with CSA A23.2, Sampling Aggregates For Use in Concrete.

.3 Results of Petrographic Examination to CSA A23.2, of aggregate representative of materials to be used for project.

.3 Advise testing firm in advance of concrete placement.

.4 The Owner may order additional testing at any time. The Contractor shall pay for those tests which indicate failure to comply with requirements.

1.6 FIELD SAMPLES

.1 Prepare minimum 0.9 m x 0.9 m field sample of exposed aggregate V-Joint finish.

.2 Approved sample will establish minimum standard and may be incorporated into work of this Section.

2. Products

2.1 MATERIALS

.1 Sand Cushion: sand as specified in Section 31 05 13.

.2 Granular Cushion: 20 mm crushed gravel as specified in Section 31 05 13.

.3 Portland cement: to CAN/CSA-A5, grey color.

.4 Aggregates For Concrete: to CSA A23.1 and as follows:

.1 Ironstone content of aggregate shall not exceed the following percentage by mass when tested to ASTM C295:

.1 Coarse Aggregate: maximum 1%.
.2 Fine Aggregate, Retained on 2.5 mm Sieve: maximum 1.5%.

.5 Water: to CSA A23.1.

.6 Air Entraining Admixture: to CAN3-A266.1.

2.2 REINFORCEMENT

.1 Deformed Steel Bars: to CSA G30.18.

.2 Welded Wire Fabric: to ASTM A185.

.3 Tie Bar for Construction Joints: plain steel bars to CSA G30.18.

.4 Anchor Pins: plain steel bar to CSA G30.18, hot dip galvanized, as detailed.

2.3 CONCRETE MIX

.1 Conform to CSA A23.1 except as otherwise specified.

.2 Supply concrete mix as specified in Geotechnical Report. 32 MPa minimum for exposed concrete.

.3 Temperature of concrete mix at placing shall be no less than 10°C and no greater than 27°C. Provide mix toward lower end of temperature range during hot weather and toward higher end of temperature range during cold weather, in accordance with CSA A23.1.

.4 Use of admixtures, other than air-entraining admixtures, are not permitted without prior written approval of Owner. Use of fly-ash is **not** permitted.

2.4 PRECAST CONCRETE SIDEWALK BLOCKS

.1 Concrete ingredients, admixtures and reinforcing steel: to CSA A23.4.

.2 Size: 610 mm x 760 mm x 45 mm.

.3 Finish: standard textured manufacturer's finish.

2.5 ACCESSORIES

.1 Form oil: non-staining mineral type.

.2 Formwork: premanufactured and profiled steel or wood forms.

.3 Poured Joint Filler: Asphalt elastic compound.

.4 Preformed Joint Filler: asphalt impregnated type to ASTM D1751.

.5 Curing Compound: to ASTM C309, Type 2 white pigmented, Class B resin-based, liquid membrane-forming type.

3. Execution

3.1 SUBGRADE PREPARATION

.1 Prepare subgrade as specified in Section 31 23 10.

3.2 SAND AND GRANULAR CUSHION

.1 Place 150 mm thick crushed gravel layer on prepared subgrade, and compact to 95% Standard Proctor Dry Density.

.2 Place 50 mm thick sand cushion layer for precast sidewalk blocks and compact to 98% Standard Proctor Dry Density.

3.3 REINFORCEMENT

.1 Clean reinforcement of loose rust and mill scale.

.2 Place reinforcement as indicated on drawings.

.3 Place 10M tie bars at 300 mm spacing and extend 300 mm into both sides of construction joints. Set half of tie bar lengths in capped sleeves to allow longitudinal movement.

3.4 PLACING CONCRETE

.1 Obtain Owner's approval of formwork and reinforcement before placing concrete.

.2 Moisten sand and granular cushion to prevent absorption of water from freshly placed concrete.

.3 Coat surfaces of manholes, catch basins and casings with form oil to prevent bond with concrete.

.4 Place concrete in accordance with requirements of CSA A23.1 unless otherwise specified.

.5 Do not place concrete on, or against, any surface that is at less than 5°C or will lower the temperature of the concrete in place, below the values specified in CSA A23.1.

.6 Vibrate by means of vibrating screed or pencil vibrator.

.7 Ensure reinforcement, inserts, embedded parts, formed joints are not disturbed during concrete placement.

.8 Screed concrete and float. Do not float while bleed water is still present.

.9 End all pours using construction joints coinciding with surface or contraction joints.

3.5 JOINTS

.1 Construct joints true to line with faces perpendicular to surface of paving. Construct transverse joints at right angles to paving centreline and longitudinal joints, unless otherwise indicated.

.2 Expansion Joints At Building Face or Other Vertical Abutments: place 15 mm wide preformed joint filler 5 mm below finished surface for full width and depth of concrete.

.3 Contraction Joints For Concrete Paving, Curbs and Gutters: construct 35 mm deep by 5 mm wide joints where shown on drawings by means of marking tool or other approved method.

.4 Surface Joints: construct 15 mm deep by 5 mm wide joints centred between contraction joints by means of marking tool or other approved method.

.5 Align curb, gutter, and sidewalk joints.

3.6 FINISHING

.1 Remove face-of-curb and gutter forms after initial set of concrete.

.2 Finish concrete surfaces as follows:

Item	Description of Finish
Sidewalks	Light broom pulled perpendicular to centreline
Curbs & Gutters	Trowel; and light broom pulled parallel to length
Inclined Vehicular Drivewaysand Ramps	Broom perpendicular to slope
Vehicular Paving	Swirl

.3 Do not trowel surfaces while bleed water is still present. Work surfaces as little as possible to achieve finish.

.4 Edge Finishing: finish edges, including joints, with 50 mm wide edgeing tool having 6 mm radius edge.

.5 Where broom finish specified, use approved nylon brush to provide uniform texture and pattern.

.6 Do not add water before or during finishing operation.

3.7 CURING AND PROTECTION

.1 Cure freshly deposited concrete in accordance with CSA A23.1.

.2 Apply curing compound immediately after finishing, in accordance with manufacturer's instructions. Promptly re-coat areas subjected to heavy rainfall within 3 hours after initial application.

.3 When ambient air temperature is at or below 2°C, or when there is a probability of it falling to 2°C within 24 hours of placing, provide cold weather protection until a period of 72 hours of concrete temperature at or above 2°C has been attained. Protection shall meet requirements of CSA A23.1.

.4 Estimate rate of surface moisture evaporation in accordance with CSA A23.1 and provide protection from drying as required.

.5 Keep vehicular traffic off paved areas until paving has cured sufficiently to support such loads.

3.8 TOLERANCES

.1 Meet following criteria for exposed concrete surfaces:

.1 Trueness of surface: 6 mm maximum deviation in 3 m length.

.2 Elevation: 10 mm maximum deviation from drawings.

.3 Alignment: 25 mm maximum deviation from drawings.

3.9 INSTALLATION OF PRECAST CONCRETE SIDEWALK BLOCKS

.1 Place and level precast concrete sidewalk blocks, ensuring full contact with sand cushion and edges are level with adjacent blocks.

.2 Adjust compacted sand cushion as required to eliminate rocking of sidewalk blocks when pressure is applied at any given corner.

.3 Brush entire sidewalk block area with sand to fill spaces between blocks. Remove excess sand.

END OF SECTION

1. General

1.1 RELATED REQUIREMENTS

.1 Asphalt Concrete Pavement: Section 32 12 16.
.2 City of Whitehorse Servicing Standards Manual (latest edition)

1.2 REFERENCE DOCUMENTS

.1 The following documents, referenced in this Section, are published by the Master Painters Institute (MPI)

.1 Architectural Painting Specification Manual

.2 Maintenance Repainting Manual

.3 Approved Product List

1.3 SUBMITTALS

.1 Comply with requirements of Division 01.

.2 Submit product data for traffic marking paint, including MPI product number.

1.4 QUALITY ASSURANCE

.1 Materials and workmanship for new work shall meet or exceed requirements of the APS Manual.

.2 Materials and workmanship for maintenance work shall meet or exceed requirements of the MR Manual.

1.5 DELIVERY, STORAGE, AND HANDLING

.1 Deliver materials in sealed original labeled containers bearing manufacturer's name, type of material, brand name, colour designation.

1.6 SEQUENCING AND SCHEDULING

.1 Sequence and schedule work so as to provide access to building[s] at all times. Arrange work so as not to interfere with normal use of premises.

2. Products

2.1 MATERIALS

.1 Materials are specified by the designated MPI systems, with colours specified herein.

.2 Only products listed in the MPI “Approved Product List” are acceptable for use.

2.2 TRAFFIC MARKING PAINT SYSTEM

.1 System for New Work: EXT 2.1A, Latex, yellow colour.

3. Execution

3.1 PROTECTION OF EXISTING WORK

.1 Protect structures, buildings, sidewalks, landscaping and other surface features against spillage and over-spray during painting operation.

3.2 PREPARATION OF SUBSTRATE

.1 Prepare new pavement in accordance with manufacturer's instructions and in accordance with "Architectural Painting Specification Manual", Chapter 2, Section 3.

.2 Prepare for maintenance repainting for the existing degree of surface deterioration (DSD) in accordance with "Maintenance Repainting Manual", Chapter 2, Section 3.

3.3 APPLICATION OF PAVEMENT LINE MARKINGS

.1 Clean pavement surface as recommended by paint manufacturer.

.2 Paint lines straight and in uniform width, at locations indicated on drawings.

.3 Apply paint using marking machine or line stencil, and as recommended by manufacturer, to minimum 0.18 mm dry film thickness.

.4 Line Width:

.1 Roadways and Parking Areas: 100 mm, except where otherwise indicated.

3.4 CLEAN-UP

.1 Remove spillage and over-spray of paint from pavement, sidewalks, building and other site features. Use methods and materials without damaging and leaving visible residue on substrates.

3.5 PROTECTION OF COMPLETED WORK

.1 Keep traffic off pavement markings for a time as recommended by paint manufacturer.

END OF SECTION

Part 1 General

1.1 RELATED REQUIREMENTS

.1 This Section of the specification forms part of the Contract Documents and is to be read, interpreted and coordinated with all other parts.

1.2 REFERENCE STANDARDS

.1 American Society for Testing and Materials International (ASTM)

- .1 ASTM D1785, Standard Specification for Poly (Vinyl Chloride) (PVC) Plastic Pipe, Schedules 40, 80 and 120.
- .2 ASTM D2466, Standard Specification for Poly (Vinyl Chloride) (PVC) Plastic Pipe Fittings, Schedule 40.
- .3 ASTM D2467, Standard Specification for Poly (Vinyl Chloride) (PVC) Plastic Pipe Fittings, Schedule 80.
- .4 ASTM D2564, Standard Specification for Solvent Cements for Poly (Vinyl Chloride) (PVC) Plastic Piping Systems.
- .5 ASTM D2855, Standard Practice for Making Solvent-Cemented Joints with Poly (Vinyl Chloride) (PVC) Pipe and Fittings.

.2 American National Standards Institute/ American Water Works Association (ANSI/AWWA)

- .1 ANSI/AWWA C651, Standard for Disinfecting Water Mains.
- .2 ANSI/AWWA C800, Standard for Underground Service Line Valves and Fittings.
- .3 ANSI/AWWA C900, Standard for Polyvinyl Chloride (PVC) Pressure Pipe, and Fabricated Fittings, 4 Inch through 12 Inch (100 mm - 300 mm), for Water Transmission and Distribution.
- .4 ANSI/AWWA C907, Standard for Polyvinyl Chloride (PVC) Pressure Pipe, and Fabricated Fittings, 4 Inch through 12 Inch (100 mm - 300 mm), for Water Transmission and Distribution.
- .5 ANSI/AWWA C906, Standard for Polyethylene Pressure Pipe, and Fabricated Fittings, for Water Transmission and Distribution.

.3 CSA Group (CSA)

- .1 CSA-B137 Series-[05] , Thermoplastic Pressure Piping Compendium (Consists of B137.0, B137.1, B137.2, B137.3, B137.4, B137.4.1, B137.5, B137.6, B137.8, B137.9, B137.10, B137.11 and B137.12).
  - .1 CSA-B137.3-[05] , Rigid Polyvinyl Chloride (PVC) Pipe for Pressure Applications.

.4 City of Whitehorse Servicing Standards Manual (COWSSM).

1.3 SUBMITTALS

.1 Submit in accordance with Section 01 33 00 - Submittal Procedures.

.2 Product Data:

.1 Submit manufacturer's instructions, printed product literature and data sheets for pipes, and include product characteristics, performance criteria, physical size, finish and limitations.

.3 Shop Drawings:

.1 Submit drawings as indicated.

.4 Samples:

.1 Provide location of bedding materials and allow for sampling as required.

.5 Certificates:

.1 Certification to be marked on pipe.

.6 Submit data to produce record drawings, including directions for operating valves, list of equipment required to operate valves, details of pipe material, location of air and vacuum release valves, hydrant details.

.1 Include top of pipe, horizontal location of fittings and type, valves, valve boxes, valve chambers and hydrants.

.7 Operation and Maintenance Data: submit operation and maintenance data for pipe, valves, valve boxes, valve chambers and hydrants for incorporation into manual.

.8 Submit Service Record Card, Valve Record Card and Hydrant Cards per City of Whitehorse Servicing Standards Manual.

1.4 DELIVERY, STORAGE AND HANDLING

.1 Deliver, store and handle materials in accordance with manufactures recommendations.

.2 Delivery and Acceptance Requirements: deliver materials to site in original factory packaging, labelled with manufacturer's name and address.

1.5 QUALITY ASSURANCE

.1 Submit in accordance with Section 01 45 00 - Quality Control.

.2 Health and Safety Requirements:

.1 Do construction occupational health and safety in accordance with Yukon Occupational Health and Safety Regulations and Section 01 41 20 - Site Safety Requirements.

1.6 SCHEDULING OF WORK

.1 Schedule Work to minimize interruptions to existing services.

.2 All main line tie-ins shall be done in evenings or on weekend, and outside of peak demand periods or emergency operations.

.3 The new water main shall be pressure tested, disinfected, and flushed prior to tie-ins to existing water mains or services.

.4 All tie-ins shall be coordinated with the Owner.

.5 Notify in writing the Engineer and the affected buildings a minimum of 48 hours excluding weekends and holidays, in advance of interruption.

.6 Submit schedule of expected interruptions for review by Engineer and Owner

.7 Notify in writing the Engineer, and any persons affected by service interruption minimum of 48 hours in advance.

.8 Provide temporary water if water is disrupted for greater than 8 hours

.9 Notify fire department of planned or accidental interruption of water supply to hydrants.

.10 Provide and post "Out of Service" sign on hydrant not in use.

.11 Advise local police, ambulance, fire, and transit department of anticipated interference with movement of traffic.

Part 2 Products

2.1 PIPE, JOINTS AND FITTINGS

.1 High Density Polyethylene pressure pipe:

.1 ASTM D3350/F714-88, and D2837

.2 Type III, Category 5, Class C, Grade P34 ASTM D1248, PE 3408 AWWA C-906-90

.3 Minimum series 160, 2% Carbon Black.

.4 Polyethylene to polyethylene joints: to be thermal butt fusion joined, to ASTM D2657.

.5 Electrofusion couplings will be allowed provided the contractor can supply proof that the operator is industry certified.

.6 HDPE pipe may be adapted to fittings or other systems by means of an assembly consisting of a polyethylene stub end, butt-fused to the pipe, and a backup flange of ductile iron, made to class 150, ANSI B16.5 dimensional standards.

.7 Fittings shall be in accordance with AWWA C906 HDPE pipe and ASTM D-2513/F1055.

.8 Tapping sleeves shall be Robar, corrosion protective.

.9 Mechanical couplings shall be Victaulic 955 or approved equal.

2.2 FACTORY-APPLIED & HALF SHELL INSULATION

.1 All water piping to be provided with **dual (2) redundant heat trace channels** for installation of Heat trace by Div. 26.

.2 Water mains, if insulated, shall be insulated using a factory-applied, rigid foam material specified as follows:

.1 Density: 35.2 kg/m3 minimum ASTM D1622

.2 Closed cell content : 90% minimum ASTM D6226

.3 Water absorption: 4.0% by Volume ASTM D2842-69

.4 Thermal conductivity: 0.023 W/m @ 22 degrees Celsius ASTM C518

.5 System Compressive strength: Modified ASTM D 1621 with 50 mil Jacket. Approximately 414 to 552 KPa, varies with pipe diameter.

.6 Thickness: Minimum 50 mm

.3 Insulated waterman shall have a jacket using high-density polyethylene carbon black, factory applied by continuous extrusion or approved tape-wrap method, specified as follows:

.1 Tape Jacket Material: Polyethylene UV inhibited, formulated for superior cold weather properties (to –45°C)

.2 Sealant: Butyl Rubber and resin

.3 Tensile strength : 21 MPa Minimum (ASTM D 1000) 8.93 kg/cm width

.4 Thickness: 1.14 mm minimum for extruded polyethylene or 2 cross wraps, for a total minimum thickness of 1.27 mm for the tape-wrapped polyethylene application

.4 To aid in leak detection joints on services shall not be taped. The Contractor is to coat the exposed insulation at the end of the pipe with tar. When compression couplings are used for connections, one end of the half-shell is to be taped to the pipe. The other end of the half shell shall be coated with tar and left untapped

.5 The pipe shall be located at the centre of the insulation material. An allowable tolerance on this specification is as follows:

.1 Total diameter of insulation pipe structure shall in no instance be less than the pipe diameter plus 100 mm.

.2 The minimum thickness of insulation at any location of the pipe shall be 50 mm.

.6 The Contractor shall provide suitable tape and shall tape-wrap all locations where such tests are performed. Materials, which do not comply with the foregoing specification, will be rejected.

.7 The Engineer shall reserve the right to have a representative present at the insulation applicator's plant during insulation application. The Contractor shall provide a schedule to the Engineer indicating when the insulation application will take place.

.8 The pipe joints and fittings shall be insulated with a minimum 50 mm polyethylene half shell or where necessary use approved field insulation kits. Protect insulation with polyethylene heat-shrink sleeve or a triple overlapping wrap of suitable heat-shrinking tape.

2.3 STYROFOAM BOARD INSULATION

.1 Styrofoam board insulation shall be as shown on the construction drawings. Insulation shall be extruded polystyrene with a minimum compressive strength of 60 psi or better. Install using interlocking pieces or overlap sheets 150 mm.

2.4 SERVICE CONNECTIONS

.1 Water service pipe shall be HDPE pipe and shall be provided with a factory-applied 50 mm thick insulation and waterproof jacket. Service pipe shall be supplied in minimum 10.0 m lengths. No joint is allowed in the 10.0 m length.

.2 Couplings for joining copper shall be compression fitting, EMCO Successor, or approved equal. Size of couplings is to match diameter of service pipe. Only one coupling will be allowed per service to minimize pipe splicing on services less than 19m. Any compression connection on Polyethylene pipe must use approve stiffener.

2.5 PIPE BEDDING AND SURROUND MATERIAL

.1 Granular material to Section 31 05 16 - Aggregate Materials and following requirements:

.1 Gradations to be within limits specified when tested to ASTM C136 and ASTM C117.

.2 The bedding sand shall be free from organic material and shall meet the following grading requirements:

SIEVE SIZE (mm)	PASSING BY MASS (%)
10.00	100
5.00	80-100
2.00	55-100
0.63	25-65
0.25	10-40
0.08	2-15

.1 The liquid limit shall not exceed 25 and the plasticity index shall not exceed 6.

.3 Bedding stone shall be used when wet trenching conditions exist.

.1 The bedding stone shall be free from organic material and shall meet the following grading requirements:

SIEVE SIZE	PASSING BY MASS

(mm)	(%)
25.00	100
20.00	70-100
12.50	55-100
10.00	30-80
5.00	0-40
2.00	0-10

2.6 BACKFILL MATERIAL

.1 As indicated in section 31 23 33.01 - Excavating, Trenching and Backfilling.

2.7 PIPE DISINFECTION

.1 Before being put into service, and before certification of completion by the Engineer, all installed mains shall be disinfected according to the AWWA Standard C-651 and tested for bacterial content and residual chlorine. Provide test reports, on contractor's letter head with procedures, results, signed and dated for inclusion in O&Ms.

.2 Contractor to follow City of Whitehorse Water Main Testing and Commissioning Procedures, latest revision.

Part 3 Execution

3.1 EXAMINATION

.1 Verification of Conditions: verify that conditions of substrate previously installed under other Sections or Contracts are acceptable for distribution piping installation in accordance with manufacturer's written instructions.

.1 Visually inspect substrate in presence of the Engineer.

.2 Inform the Engineer of unacceptable conditions immediately upon discovery.

.3 Proceed with installation only after unacceptable conditions have been remedied.

3.2 PREPARATION

.1 Clean pipes, fittings, and appurtenances of accumulated debris and water before installation.

.1 Inspect materials for defects.

.2 Remove defective materials from site.

.2 Do trenching work in accordance with Section 31 23 33.01 - Excavating, Trenching and Backfilling.

.3 Ensure trench depth allows coverage over pipe of 3 m minimum from finished grade or as indicated.

3.3 GRANULAR BEDDING AND PIPE SURROUND

.1 Place bedding in unfrozen condition.

.2 All water pipes shall be bedded on a 150 mm layer of granular material in accordance with Section 2.9, which shall be continued up to the spring line of the pipe and for the full width of the trench.

.3 Following bedding, the initial backfill consisting of approved bedding material shall be placed in 150 mm layers from the spring line to 300 mm above the crown of the pipe for the full width of the trench.

.4 Bedding and initial backfill shall be compacted to 95% Standard Proctor Density at optimum moisture content. Where a previously installed sewer or other utility is being crossed, the Contractor shall install a crossing as indicated in the Standard Drawings.

3.4 PIPE INSTALLATION

.1 To connect water service to building:

.1 Install coupling necessary for connection to building plumbing.

.2 If plumbing is already installed, make connection; otherwise cap or seal end of pipe and place temporary marker to locate pipe end.

.2 The pipe shall be laid true to the line, grade and depth as per Trenching and Backfilling specifications, and staked to prevent sags and humps and to provide the proper bury at hydrants and valves.

.3 Where minor deflections in line or grade are required, the deflections shall not exceed one half the maximum recommended by the pipe manufacturer.

.4 Pipe having bell ends shall be laid with the bell ends facing the direction of laying.

.5 No pipe shall be laid in water or where the trench conditions are unsuitable.

.6 To enable proper joints to be made, bell or coupling holes shall be provided in the bedding material.

.7 Ends of pipe are to be covered to prevent intrusion of deleterious materials.

.8 Join pipes in accordance with AWWA Specifications C111 and manufacturer's recommendations.

.9 Bevel or taper ends of PVC pipe to match fittings.

.10 Handle pipe by methods recommended by pipe manufacturer. Do not use chains or cables passed through pipe bore so that weight of pipe bears on pipe ends.

.11 Lay pipes on prepared bed, true to line and grade.

.1 Ensure barrel of each pipe is in contact with shaped bed throughout its full length.

.2 Take up and replace defective pipe.

.3 Correct pipe which is not in true alignment or grade or pipe which shows differential settlement after installation greater than:

.1 ALIGNMENT - the centreline of 900 mm pipe and smaller shall not be more than 150 mm off the given line. The centreline of pipe greater than 900 mm shall not be more than 50 mm per 300 mm of diameter off the given line.

.2 GRADE - the invert of the sewer main shall not deviate from the given grade by an amount greater than 6 mm plus 20 mm per metre of diameter of pipe.

.12 Cut pipes in approved manner as recommended by pipe manufacturer, without damaging pipe or its coating and to leave smooth end at right angles to axis of pipe.

.13 Align pipes before jointing.

.14 Complete each joint before laying next length of pipe.

.15 Minimize deflection after joint has been made.

.16 Apply sufficient pressure in making joints to ensure that joint is completed to manufacturer's recommendations.

.17 Ensure completed joints are restrained by compacting bedding material alongside and over installed pipes.

.18 When stoppage of work occurs, block pipes in an approved manner to prevent creep during down time.

.19 Recheck plastic pipe joints assembled above ground after placing in trench to ensure that no movement of joint has taken place.

.20 Do not lay pipe on frozen bedding.

.21 Backfill remainder of trench.

3.5 UNDERCROSSING

.1 Conduct crossing as indicated in the standard detail drawing.

3.6 SERVICE CONNECTIONS

.1 To connect to building:

.1 Install coupling necessary for connection to building plumbing.

.2 If plumbing is already installed, make connection, otherwise cap or seal end of pipe and place temporary marker to locate pipe end. Temporary Marker shall be a 50 mm x 100 mm wood marker stake, protruding 500 mm above ground. The stake shall extend down to the water service stub. The stake shall be painted blue.

.2 Do not install service connections until satisfactory completion of hydrostatic and leakage tests of new piping

.3 Construct service connections at right angles to water main unless otherwise directed.

.4 Locate curb stops 150mm inside right-of-way, or as indicated on drawing.

.1 For the continuing care project, valve and curb stop shall be off the main.

.5 The Contractor shall make all necessary connections to existing water mains, unless otherwise directed, and shall interrupt service to the existing system for only a minimum period.

.6 Prior to making such connections, the Contractor shall make all necessary arrangements with the Engineer and shall notify those persons affected by the interruption of the

3.7 HYDROSTATIC AND LEAKAGE TESTING

.1 Before being put into service, and before certification of completion by the Engineer, all installed mains shall be pressure tested in the presence of the Engineer, according to National Plumbing Code of Canada.

.2 Hydrostatically test piping to the requirements of the manufacturer. At minimum test piping to 300 kPa.

.3 Thoroughly examine exposed parts and correct for leakage as necessary.

.4 Examine exposed pipe, joints, fittings and appurtenances while system is under pressure.

.5 Remove joints, fittings and appurtenances found defective and replace with new sound material and make watertight.

.6 Repeat hydrostatic test until defects have been corrected

3.8 BACKFILL

.1 The backfill shall be placed and compacted in accordance with Section 31 23 33.01 – Excavating, Trenching and Backfilling.

.2 The backfill around the casing shall be compacted by mechanical tampers up to the finished grade to prevent tilting.

3.9 FLUSHING, PRESSURE TESTING AND DISINFECTING

.1 Before being put into service, and before certification of completion by the Engineer, all installed mains shall be disinfected according to the NPC and tested for bacterial content and residual chlorine.

.2 Flush and disinfect in accordance Section 21 11 16 and the NPC.

.3 Flushing and disinfecting operations: witnessed by Engineer and carried out by Contractor.

.4 Notify Engineer at least 2 days in advance of proposed date when disinfecting operations will begin.

.5 When flushing has been completed to Engineer's approval, introduce strong solution of chlorine as approved by Engineer into water main and ensure that it is distributed throughout entire system.

.6 Disinfect all water piping.

.7 Rate of chlorine application to be proportional to rate of water entering pipe.

.8 Chlorine application to be close to point of filling water main and to occur at same time.

.9 Operate valves and appurtenances while main contains chlorine solution.

.10 Flush line to remove chlorine solution after 24 hours.

.11 Measure chlorine residuals at extreme end of pipe line being tested.

.12 Perform bacteriological tests on water main, after chlorine solution has been flushed out.

.13 Take water samples at service connections, in suitable sequence, to test for chlorine residual.

.14 After adequate chlorine residual not less than 50 ppm has been obtained, leave system charged with chlorine solution for 12 hours.

.15 After 12 hours, take further samples to ensure that there is still not less than 20 ppm of chlorine residual remaining throughout system.

.16 Take samples. Should contamination remain or recur during this period, repeat disinfecting procedure. Contractor to submit certified copy of test results.

3.10 AS-BUILT SURVEY

.1 Perform as-built survey of all installed works as construction progresses. Items and appurtenances to be as-built include:

.2 Water main and service – horizontal and vertical location at minimum 10 m interval.

.3 Water main valves and service valves

.4 Provide as-built information to City of Whitehorse to their requirements.

3.11 SURFACE RESTORATION

.1 Restore surfaces in accordance with the requirements of Div 32.

3.12 MAINTENANCE

.1 If leaks develop in the work before the expiry of the maintenance period, the Contractor shall make the necessary repairs.

END OF SECTION

Part 1 General

1.1 REFERENCES

.1 American National Standards Institute/American Water Works Association (ANSI/AWWA)

.1 ANSI/AWWA C111/A21.11-[07], Rubber-Gasket Joints for Ductile-Iron Pressure Pipe and Fittings.

.2 ASTM International

.1 ASTM C14M-[07], Standard Specification for Nonreinforced Concrete Sewer,Storm Drain and Culvert Pipe (Metric).

.2 ASTM C76M-[10a], Standard Specification for Reinforced Concrete Culvert, Storm Drain and Sewer Pipe (Metric).

.3 ASTM C117-[04], Standard Test Method for Material Finer Than 75 [MU] m (No. 200) Sieve in Mineral Aggregates by Washing.

.4 ASTM C136-[06], Standard Test Method for Sieve Analysis of Fine and Coarse Aggregates.

.5 ASTM C443M-[07], Standard Specification for Joints for Concrete Pipe and Manholes, Using Rubber Gaskets (Metric).

.6 ASTM D698-[07e1], Standard Test Method for Laboratory Compaction Characteristics of Soil Using Standard Effort (12,400 ft4-lbf/ft^3 (600 kN-m/m^3)).

.7 ASTM D2680-[01(2009)], Standard Specification for Acrylonitrile-Butadiene-Styrene (ABS) and Poly (Vinyl Chloride) (PVC) Composite Sewer Piping.

.8 ASTM D3034-[08], Standard Specification for Type PSM Poly (Vinyl Chloride) (PVC) Sewer Pipe and Fittings.

.9 ASTM D3350-[10], Standard Specification for Polyethylene Plastics Pipe and Fittings Materials.

.3 CSA International

.1 CSA A3000-[08], Cementitious Materials Compendium.

.2 CSA A257 Series-[09], Standards for Concrete Pipe and Manhole Sections.

.3 CAN/CSA-B70-[06], Cast Iron Soil Pipe, Fittings, and Means of Joining.

.4 CSA B1800-[11], Thermoplastic Non-pressure Pipe Compendium.

.1 CSA B182.1-[11], Plastic Drain and Sewer Pipe and Pipe Fittings.

.2 CSA B182.2-[11], PSM Type Polyvinylchloride PVC Sewer Pipe and Fittings.

.3 CSA B182.6-[11], Profile Polyethylene (PE) Sewer Pipe and Fittings for Leak-Proof Sewer Applications.

.4 CSA B182.11-[11], Standard Practice for the Installation of Thermoplastic Drain, Storm, and Sewer Pipe and Fittings.

.4 City of Whitehorse Servicing Standards Manual (COWSSM).

1.2 ADMINISTRATIVE REQUIREMENTS

.1 Scheduling:

.1 Schedule Work to minimize interruptions to existing services and maintain existing sewage flows during construction.

.2 Submit schedule of expected interruptions for approval and adhere to approved schedule.

.3 Notify the Engineer and Owner 48 hours minimum in advance of any interruption in service.

1.3 ACTION AND INFORMATIONAL SUBMITTALS

.1 Submit in accordance with Section 01 33 00 - Submittal Procedures.

.2 Product Data:

.1 Submit manufacturer's instructions, printed product literature and data sheets for pipes, and include product characteristics, performance criteria, physical size, finish and limitations.

.3 Shop Drawings:

.1 Submit drawings as indicated.

.4 Certificates:

.1 Certification to be marked on pipe.

.5 Submit data to produce record drawings, including details of pipe location, material, location of manholes.

.1 Include top of pipe, horizontal location of fittings and type and manholes.

.6 Operation and Maintenance Data: submit operation and maintenance data for pipe, and manholes for incorporation into manual.

.7 Submit Service Record Card per City of Whitehorse Standard.

1.4 DELIVERY, STORAGE AND HANDLING

.1 Deliver, store and handle materials in original factory packaging, labelled with manufacturer's name and address, in accordance with manufactures recommendations.

.2 Delivery and Acceptance Requirements: deliver materials to site in original factory packaging, labelled with manufacturer's name and address.

1.5 QUALITY ASSURANCE

.1 Submit in accordance with Section 01 45 00 - Quality Control.

.2 Health and Safety Requirements:

.3 Do construction occupational health and safety in accordance with Yukon Occupational Health and Safety Regulations and Section 01 41 20 - Site Safety Requirements.

Part 2 Products

2.1 GENERAL

.1 Various factors affecting the pipe class shall be taken into account, and pipe class shall be evaluated as per standard engineering practice.

2.2 HIGH DENSITY POLYETHYLENE PIPE (HDPE), JOINTS AND FITTINGS.

.1 HDPE: to ASTM D3350/F714, and D2837; ASTM D1248, PE 3408 AWWA C-906-90

.2 Minimum Series 160

.3 Iron pipe size

.4 Working stress of 5000 kPa

.5 Joints:

.1 Wherever possible the polyethylene pipe should be joined by the method of thermal butt-fusion, as outlined in ASTM-D2657, Polyethylene Heat Joining Polyethylene

.2 Pipe and Fittings. Butt-fusion joining of pipe and fittings shall be performed in accordance with procedures recommended by the manufacturer

2.3 INSULATION

.1 All sanitary piping shall be provided with **dual (2) redundant** heat trace channels for installation of heat trace by Div. 26.

.2 Sanitary sewer mains, if insulated, shall be insulated using a rigid foam, factory-applied material.

.3 Gravity sanitary sewers may be insulated as follows, in accordance with a thermal analysis under normally expected operating conditions:

Density	35.2 kg/m3 minimum ASTM D1622
Closed cell content	90% minimum ASTM D2856
Water absorption	4.0% by Volume ASTM D2842-69
Thermal conductivity	0.023 W/m @ 22 degrees Celsius ASTM C518
System Compressive strength	Modified ASTM D 1621 with 50 mil Jacket. Approximately 414 to 552 KPa, varies with pipe diameter.
Thickness	Minimum 50 mm

.4 Insulated sanitary sewers shall have a jacket using high-density polyethylene carbon black, factory applied by continuous extrusion or approved tape-wrap method, specified as follows:

Tape Jacket Material	Polyethylene UV inhibited, formulated for superior cold weather properties (to –45°C)
Sealant	Butyl Rubber and resin
Tensile strength	21 MPa Minimum (ASTM D 1000) 8.93 kg/cm width
Thickness	1.14 mm minimum for extruded polyethylene or 2 cross raps for a total minimum thickness of 1.27 mm for the tape wrapped polyethylene application.

.5 A pipe shall be located at the centre of the insulation material. An allowable tolerance on this specification is as follows:

.1 Total diameter of insulation pipe structure shall in no instance be less than the pipe diameter plus 100 mm.

.2 The minimum thickness of insulation on any side of the pipe at any location shall be 50 mm.

.6 Remove insulation from pipe where pipes connect to manholes. Any exposed pipe outside of the manhole shall then be reinsulated.

2.4 PIPE BEDDING AND SURROUND MATERIALS

.1 Granular material to Section 31 05 16 - Aggregate Materials and following requirements:

.1 Crushed or screened stone, gravel or sand.

.2 Gradations to be within limits specified when tested to ASTM C136 and ASTM C117.

.2 The bedding sand shall be free from organic material and shall meet the following grading requirements:

SIEVE SIZE (mm)	PASSING BY MASS (%)
10.00	100
5.00	80-100
2.00	55-100
0.63	25-65
0.25	10-40
0.08	2-15

.3 Bedding stone shall be used when wet trenching conditions exist.

.1 The bedding stone shall be free from organic material and shall meet the following grading requirements:

SIEVE SIZE	PASSING BY MASS

(mm)	(%)
25.00	100
20.00	70-100
12.50	55-100
10.00	30-80
5.00	0-40
2.00	0-10

.4 Concrete mixes and materials for cradles, encasement, supports as per detail drawings.

2.5 BACKFILL MATERIAL

.1 As indicated in accordance with Section 31 23 33.01 - Excavating, Trenching and Backfilling.

Part 3 Execution

3.1 EXAMINATION

.1 Verification of Conditions: verify that conditions of substrate previously installed under other Sections or Contracts are acceptable for sewer pipe installation in accordance with manufacturer's written instructions.

.1 Visually inspect substrate in presence of the Engineer.

.2 Inform the Engineer of unacceptable conditions immediately upon discovery.

.3 Proceed with installation only after unacceptable conditions have been remedied.

3.2 PREPARATION

.1 Clean pipes and fittings of accumulated debris and water before installation.

.1 Inspect materials for defects.

.2 Remove defective materials from site.

.2 Clean and dry pipes and fittings before installation.

3.3 TRENCHING

.1 Do trenching Work in accordance with Section 31 23 33.01 - Excavating, Trenching and Backfilling.

.2 Protect trench from contents of sewer or sewer connection.

.3 Ensure trench depth allows coverage over pipe of 2.8 m minimum from finished grade or as indicated.

3.4 GRANULAR BEDDING

.1 Place bedding in unfrozen condition.

.2 All sewer pipes shall be bedded on a 150 mm layer of granular material in accordance with Section 2.9, which shall be continued up to the spring line of the pipe and for the full width of the trench.

.3 Following bedding, the initial backfill consisting of approved bedding material shall be placed in 150 mm layers from the spring line to 300 mm above the crown of the pipe for the full width of the trench.

.4 Bedding and initial backfill shall be compacted to 95% Standard Proctor Density at optimum moisture content. Where a previously installed sewer or other utility is being crossed, the Contractor shall install a crossing as indicated in the Standard Drawings.

3.5 INSTALLATION

.1 The Contactor shall install all piping and other appurtenances at the locations shown on the construction drawings or as directed by the Engineer. Installation shall be in accordance with the standard drawing for each appurtenance with the base of each structure to be on solid unfrozen ground.

.2 Pipe Laying: Each pipe shall be set to line and grade as shown on the Engineer's drawings. Pipe laying shall commence at the lowest point of the length being laid.

.3 Joints: All joints shall be made in strict accordance with the recommendations of the manufacturer and the specifications herein.

.1 High Density Polyethylene Pipe

.1 Wherever possible the polyethylene pipe should be joined by the method of thermal butt-fusion, as outlined in ASTM-D2657, Polyethylene Heat Joining Polyethylene Pipe and Fittings. Butt-fusion joining of pipe and fittings shall be performed in accordance with procedures recommended by the manufacturer.

.2 Handle pipe using methods approved by the manufacturer.

.1 Do not use chains or cables passed through rigid pipe bore so that weight of pipe bears upon pipe ends.

.3 Lay pipes on prepared bed, true to line and grade, with pipe invert smooth and free of sags or high points.

.1 Ensure barrel of each pipe is in contact with shaped bed throughout its full length.

.4 Joint deflection permitted within half the limit recommended by pipe manufacturer.

.5 No pipe shall be laid in water or where the trench conditions are unsuitable.

.6 Whenever Work is suspended, install removable watertight bulkhead at open end of last pipe laid to prevent entry of foreign materials.

.7 Pipe jointing:

.1 Complete each joint before laying next length of pipe.

.2 Minimize joint deflection after joint has been made to avoid joint damage.

.3 At rigid structures, install pipe joints not more than 1.2 m from side of structure.

.4 Apply sufficient pressure in making joints to ensure that joint is complete as outlined in manufacturer's recommendations.

.5 When stoppage of Work occurs, block pipes as directed by the Engineer to prevent creep during down time.

.6 Plug lifting holes with pre-fabricated plugs approved by the manufacturer set in shrinkage compensating grout.

.7 Cut pipes as required for special inserts, fittings or closure pieces as recommended by pipe manufacturer, without damaging pipe or its coating and to leave smooth end at right angles to axis of pipe.

.8 Use prefabricated saddles or field connections approved by the Engineer, for connecting pipes to existing sewer pipes.

.1 Joints to be structurally sound and watertight.

3.6 BACKFILL

.1 Place backfill material in unfrozen condition.

.2 Under paving and walks, compact backfill to at least 98% maximum density to ASTM D698.

.1 In other areas, compact to at least 95% maximum density to ASTM D698.

.3 Place unshrinkable fill in accordance with Section 31 23 33.01 - Excavating, Trenching and Backfilling.

3.7 UNDERCROSSING

.1 Conduct crossing as indicated in the standard detail drawing.

3.8 FIELD TESTING

.1 Upon completion of backfilling, sewer mains shall be tested for alignment, obstructions, infiltration, and exfiltration. If any section of the sewer main does not meet the requirements for alignment, obstructions, and infiltration, the Contactor shall make such repairs and replacements as necessary to the pipe, pipe joint or bedding until the sewer main meets these requirements.

.2 Sanitary sewer pipe to be air tested to 35kPa in accordance with the NPCC prior to back fill. Maintain test conditions during backfill and surface restoration. In the event of loss of air pressure, halt work and notify Engineer. Repair damaged or defective work prior to proceeding.

A TETRA TECH COMPANY

March 17, 2011

ISSUED FOR USE
EBA FILE: W14101527

Environment Canada
P & Y Environmental Protection Operations
91782 Alaska Highway
Whitehorse, YT Y1A 5B7

Attention: Rose Berndt

Subject: Geotechnical Evaluation – Desktop Study
Proposed Canadian Wildlife Storage Garage, Whitehorse, YT

1.0 INTRODUCTION

1.1 General

EBA, A Tetra Tech Company (EBA) was retained by Environment Canada to complete a desktop geotechnical evaluation of the selected site for the proposed storage garage situated on the Environment Canada property (91782 Alaska Hwy.) in Whitehorse, YT.

This report presents a summary of the anticipated subsurface conditions at the subject site (based on existing information and presents recommendations for foundation design and construction. For additional conditions regarding this report, please refer to the attached EBA General Conditions

Authorization to proceed with this work was provided by Lana Hunt, Contracting Officer, under Environment Canada's Short-Form Service Contract (Contract No. K4A22-10-0672) dated February 24, 2011.

1.2 Project Details

It is understood that Environment Canada requires a new storage garage at the rear of the property (proposed location shown on Figure 1) to be used by the Canadian Wildlife Services Northern Conservation Division. The proposed structure will consist of a single story wood frame building supported by a thickened monolithic concrete slab-on-grade foundation.

1.3 Scope of Services

As per EBA's proposal, dated February 18, 2011; the scope of services for this project includes the following:

- Review of EBA's historical geotechnical information for the site.
- Complete a geotechnical report detailing foundation recommendations for the proposed structure.
- Provide quality control testing (concrete and backfill compaction) during foundation construction.

EBA, A Tetra Tech Company
Calcite Business Centre, Unit 6, 151 Industrial Road
Whitehorse, YT Y1A 2V3 CANADA
p. 867.668.3068 f. 867.668.4349

2.0 EXISTING GEOTECHNICAL INFORMATION

A review of existing geotechnical information (from the three EBA reports listed below) was completed for interpreting the anticipated geotechnical conditions at the subject site and the subsequent preparation of this report.

- "Geotechnical Evaluation, Proposed Yukon Weather Centre Whitehorse, Yukon", dated March 1, 1995, completed for Public Works and Government Services Canada, Buildings Arch. & Eng. Services. A single borehole was advanced to a depth of 5.0 m, defining the soil conditions on the bench located down gradient from the subject site;
- "Environment Canada Garage Concrete Slab – Geotechnical Evaluation and Design", dated August 21, 2009, completed for Environment Canada. Two shallow (hand excavated) testpits were excavated within the garage structure, helping to define the near surface soil conditions along the bench up-gradient of the subject site; and,
- "Additional Geotechnical Evaluation Information, Proposed Whitehorse Integrated Emergency Response Facility, Whitehorse, Yukon", dated October 19, 2010, completed for Government of Yukon, Department of Highways and Public Works. The two boreholes used for this evaluation help define the soil conditions along the same bench as the subject site and the transition in to the shallow bedrock along the valley wall.

The location of the previously drilled boreholes advanced near the subject site are presented in Figure 1, along with the borehole logs from the 1995 and 2010 studies.

The recommendations developed in this report are based solely on the conditions noted during the review of the existing geotechnical information. No site-specific investigation work has been conducted.

3.0 SITE CONDITIONS

The proposed location of the new storage garage is on the same bench as the two main structures within the Environment Canada complex (along the eastern facing slope of the upper bench where shallow or exposed bedrock has been noted during previously completed projects.

As mentioned above, the historical borehole locations are shown on Figure 1. The borehole logs, showing detailed soil conditions are included in Appendix B.

3.1 Subsurface Soil Conditions

Based on the available borehole information from the surrounding area, the subsurface conditions will likely consist of gravelly sand overlying soft pro-glacial lacustrine silt, underlain by bedrock. The subsurface conditions are presented on the detailed borehole logs and Table 1, following, summarizes the subsurface soil conditions as interpreted from the borehole logs.

Table 1: Summary of Soil Conditions

Borehole Number	Gravel – Fill (m)	Gravelly Sand (m)	Sand (m)	Silt (m)	Bedrock (m)
11732-01	0.0 – 0.2		0.2 – 1.7	1.7 – 5.0(1)	
W14101370-BH08		0.0 – 1.8		1.8 – 9.5	9.5(1)
W14101370-BH09	0.0 – 1.0				1.0(1)

Note: (1) Indicates base of borehole.

3.2 Bedrock

Bedrock was encountered in two of the three boreholes and varied in depth from 1.0 m to 9.5 m, depending on the location of the borehole relative to the bedrock face that defined the west edge of the complex (approximately 30 m west of the proposed building location).

3.3 Groundwater

No groundwater was encountered during the drilling of the selected boreholes from the two previous geotechnical evaluation completed near the proposed site.

3.4 Permafrost

No permafrost was noted during the previously completed site evaluations

4.0 RECOMMENDATIONS

The site conditions based on the preliminary geotechnical data review are considered suitable for the proposed development if the following recommendations are followed.

4.1 Building Foundation

A monolithic slab on grade foundation system for the Facility can be designed and constructed based on the following recommendations:

- A subcut of at least 1.2 m should be undertaken to remove all organic material within the building footprint prior to construction;
- The subcut should extend an additional 1.2 m out from the foundation perimeter in all directions;
- Due to the anticipated proximity to soft fine grained soils, it is recommended that the base and sidewalls of the excavation be lined with a medium weight geotextile (minimum 200 g/m^2),
- The excavation should be completed such that the native soils beneath the subcut are not disturbed (excavator with a clean-up bucket would be ideal). If the surface of the native soils is disturbed it should be recompacted to at least 98% of the maximum dry density using standard effort (as per ASTM D698) at ±2% of optimum moisture content prior to the placement of any fill;

- The fill is to be non-frost susceptible (NFS) pit run gravel conforming to the specification in Table 2, placed in lifts no thicker than 200 mm, moisture conditioned and compacted to at least 98% of the maximum dry density using standard effort (as per ASTM D698) at ±2% of optimum moisture content;
- A 100 mm thick lift of 20 mm crushed basecourse gravel, conforming to the specification shown in Table 2, should be placed beneath all concrete elements. The 20 mm crushed basecourse gravel should be compacted to at least 98% of the maximum dry density using standard effort (as per ASTM D698) at ±2% of optimum moisture content before the placement of any concrete;
- Total elastic settlement of the footings founded on the compacted granular backfill at depth should be less than 25 mm with a maximum differential settlement of 19 mm;
- All concrete foundation elements must be cast onto a clean compacted granular backfill. It is important that no loose or disturbed material be allowed to remain on the bearing surface of the footing excavation. An acceptable surface must be prepared by moisture conditioning and the use of mechanical compaction equipment;
- Footing excavations must be protected from the inflow of surface water at all times and footings should not be cast directly onto or over seasonally frozen soil;
- A moisture barrier, such as polyethylene sheeting, should be placed immediately beneath the floor slabs to enhance curing; and,
- Final site grading must direct all water away from the foundation elements of the structure. Ponding adjacent to the building must be prevented, as infiltration adjacent to the foundation elements could have detrimental effects on the structural elements. Runoff from the roof must be directed onto splash pads and away from the building. This is particularly important during the late fall, just prior to freeze-up.

Table 2: Recommended Granular Material Specifications

Engineered Fill		20 mm Crushed Basecourse Gravel	
Particle Size (mm)	**% Passing by Mass**	**Particle Size (mm)**	**% Passing by Mass**
80.0	100		
25.0	55 – 100	20.0	100
12.5	42 – 84	12.5	64 – 100
5.00	26 – 65	5.00	36 – 72
1.25	11 – 47	1.25	12 – 42
0.315	3 – 30	0.315	4 – 22
0.080	0 – 8	0.080	3 – 6

4.2 FROST HEAVE CONSIDERATIONS

It is assumed that the near-surface foundation soils (silt) at the site will be extremely frost susceptible and the foundation design will require seasonal frost protection to minimize the potential for uplift caused by frost heave.

To minimize the potential for frost heave, it is necessary to either eliminate the potential for the soils supporting the foundation to freeze (keep the structure heated throughout the winter); minimize the moisture in the underlying soils to a degree where ice lenses cannot develop (not practical since the underlying soils are fairly wet) , or remove frost susceptible soils, which would require subcutting the frost susceptible soils to a depth of 2.4 m and replacement with non-frost susceptible soils.

In the Whitehorse area, the most practical solution is to subcut to a depth of 1.2 m and construct an engineer fill conforming to the gradation specification shown in Table 2, along with providing adequate perimeter insulation.

The recommended combination of subcut and perimeter insulation consists of a minimum 1.2 m deep subcut that extends at least 1.8 m out from the concrete slab perimeter. Once the excavation is covered with the medium weight, non-woven geotextile mentioned above, it can be backfilled with engineered fill to create a sloped surface 300 mm below grade 1.8 m out. Dow Chemical HI insulation, 100 mm thick should then be placed on this sloped surface, and the entire area backfilled with engineered fill. Additional details for insulation placement are shown on Figure 2.

4.3 Limit States Bearing Resistance

The National Building Code of Canada 2005 (NBCC 2005) stipulates that foundation design must be conducted using Limit State Design (LSD) methodology.

Under LSD methodology, two loading cases must be considered by the geotechnical and structural design consultants; the factored Ultimate Limit State (ULS) and the unfactored Serviceability Limit State (SLS). The ULS and SLS bearing resistances are calculated differently. The ULS bearing resistance is the maximum pressure that the soil can withstand prior to causing a bearing failure. The SLS bearing resistance is the pressure required to cause a tolerable amount of settlement. These two resistances are highly dependent on soil properties, footing size and shape, and burial depth.

The geotechnical resistance factors required to calculate the factored foundation resistances are provided in Table 3. The following geotechnical resistance factors should be incorporated into the foundation design in each case.

Table 3: Geotechnical Resistance Factors – Shallow Foundations

Item	Resistance Factor*
Vertical resistance by semi-empirical analysis using laboratory and in-situ test data	0.5
Sliding: based on friction (c=0)	0.8

* - From "User's Guide– NBCC, Structural Commentaries (Part 4 of Division B)"

The term "shallow foundations" refers to strip and spread footings that are at a shallow depth below finished exterior grade.

4.3.1 Static Foundation Design - ULS

4.3.1.1 Shallow Foundations

The term "shallow foundations" refers to strip and spread footings that are at a shallow depth below finished exterior grade.

Shallow footings may be considered for the proposed development. Ultimate and factored base resistance parameters for strip and spread footings supporting axial compressive loads are presented as follows.

Table 4: ULS bearing resistances – Shallow Foundations

Footings	Width (m)[1]	L/B Ratio[2]	ULS (kPa)
Spread	0.9	1.0	350
Strip	0.4	N/A	200

1 – Minimum widths for both the spread and strip footings.

2 – L/B ratio is length to width ratio.

3 – A Standard Penetration Test (SPT) value of 25 blows for backfill gravel was used in the analysis.

If greater footings widths or different footing depths are required, EBA should be contacted as the ULS resistances for these situations have not been reviewed. With larger footings or smaller structures there is a potential for footings to rely on the same soil for resistance. If the distance between two footings is less than half of the sum of the two footing widths then the footings should be analysed to ensure the stress bulbs of these footings are not overlapping. For example, if a 6 m wide footing and a 4 m wide footing are less than 5 m apart from each other (edge to edge) they may be relying on the same soil for resistance. If this is the case with any footings, EBA should be contacted as the ULS resistances for these footings will be lower than shown in Table 4.

4.3.2 Foundation Settlement Considerations – SLS Design

4.3.2.1 General

In addition to analyzing the ultimate limit state resistance of a foundation, the serviceability limit state (SLS) must also be addressed. The SLS is an analysis of the amount of settlement a foundation element would undergo under unfactored structural loads. Historically, a settlement of 25 mm was identified as a tolerable limit for most structures.

Settlement-based criterion from elastic displacement theory is used to assess the SLS design of foundations incorporating base resistance for shallow foundations.

4.3.2.2 Shallow Foundations

The following expression should be used to estimate the settlement of shallow foundations (footings) under SLS conditions, using unfactored structural loads:

$$S = (K) \times (P/LE)$$

Where:

S	=	Foundation settlement (m)
K	=	[0.45 x ln(L/B)]+ 0.79
P	=	Unfactored structural load (live load plus dead load, kN)
B	=	Footing width (m)
L	=	Footing length (m)
E	=	Elastic Modulus of the engineered fill (use 31,500 kPa)

For each loading case, the footing dimensions used in the above expression should be the footing width determined from analysis of factored (ULS) structural loads and factored (ULS) base resistance. If the calculated settlement is higher than tolerable for the structure, SLS may govern the footing design. Under such conditions, EBA should be contacted to provide further direction regarding suitable methods of settlement control.

4.4 Seismic Conditions

The 2005 National Building Code requires that a site classification be established for all structures. Based on the soil conditions noted it is EBA's conclusion that the soils in the vicinity of the proposed site correspond to those described in Site Classification E, per Table 4.1.8.4.A, NBCC 2005.

4.5 Excavation Sideslopes

During building construction the excavation should have the perimeter sloped back at an angle no steeper than 1.5H:1V for the soils expected to be encountered on this site; however, some sloughing of the excavation walls should be anticipated. Spoil piles should be kept a distance away from the excavation crest equal to or greater than the excavation depth. If the excavation is deeper than 1.2 m the sideslopes must be shored or shaped in accordance with the most recent edition of the Occupational Health and Safety Regulations.

4.6 Site Grading

Backfill around any foundation system should consist of free-draining granular material, capped with topsoil or other relatively impervious soils, concrete or pavement. All non-structural fill should be placed in lift thicknesses not exceeding 0.2 m and compacted to at least 95% of the maximum dry density using standard effort (as per ASTM D698). Final site grading should enhance positive drainage and direct water away from the structure.

4.7 Concrete

EBA recommends that all concrete be designed, mixed, placed and tested in accordance with the most recent edition of the Canadian Standards Associations (CSA) standard CAN/CSA-A23.1 and A23.2.

According to these standards, concrete should be designed to at least satisfy minimum durability requirements as defined by exposure class.

The exposure class of the concrete is dependent upon the presence or lack of chlorides, sulphates, freezing and thawing conditions and soil saturation. Based on the aforementioned recommendations the foundation system will have concrete exposed to cycles of freezing and thawing. The governing exposure class is "F-2". There are no reactivity issues associated with aggregates supplied by Whitehorse area concrete producers. Therefore, fly ash or blended cement and fly ash will not be required on this project.

In addition to the above, CAN/CSA-A23.1 also provides recommendations for cold weather concrete placement. These include protecting freshly placed concrete from freezing temperatures.

4.8 Design, Observation and Testing Services

All foundation design recommendations presented are site specific and based on the assumption that an adequate level of construction monitoring during foundation excavation and installation will be provided, and that all construction will be carried out by a suitably qualified, experienced contractor. An adequate level of construction monitoring also ensures the recommendations based on data obtained during the excavation are relevant to other areas of the site.

It is recommended that EBA be given the opportunity to review the details of the final design related to the geotechnical aspects of the building foundation, prior to construction. Past experience has shown that this action may prevent inconsistencies, poor performance, and/or increased costs that may lead to disputes.

5.0 LIMITATIONS OF REPORT

This report and its contents are intended for the sole use of Environment Canada and their agents. EBA, A Tetra Tech Company does not accept any responsibility for the accuracy of any of the data, the analysis or the recommendations contained or referenced in the report when the report is used or relied upon by any Party other than Environment Canada, or for any Project other than the proposed development at the subject site. Any such unauthorized use of this report is at the sole risk of the user. Use of this report is subject to the terms and conditions stated in EBA's General Conditions that are provided in Appendix A of this report.

CLOSURE

We trust this report meets your present requirements. Should you have any questions or comments, please contact the undersigned at your convenience.

Sincerely,
EBA, A Tetra Tech Company

PROFESSIONAL
YUKON
CHADWYCK P. COWAN
TERRITORY
ENGINEER
Mar 17/11

Chadwyck Cowan, P.Eng.
Project Director-Yukon, Arctic Region
Direct Line: 867.668.2071 x229
ccowan@eba.ca

Myles Plaunt, C.E.T.
Engineering Technician, Arctic Region
Direct Line: 867.668.2071 x227
mplaunt@eba.ca

/ajw

PERMIT TO PRACTICE
EBA ENGINEERING CONSULTANTS LTD.
SIGNATURE
Date Mar 17/11
PERMIT NUMBER PP003
Association of Professional Engineers of Yukon

Attachments:
Figure 1: Site Plan Showing Borehole Locations
Figure 2: General Details of Perimeter Foundation Insulation
Appendix A: EBA Geotechnical Report – General Conditions
Appendix B: EBA Testhole Logs and Particle Size Distribution Results

FIGURES

Figure 1 Site Plan Showing Borehole Locations

Figure 2: General Details of Perimeter Foundation Insulation

Q:\Whitehorse\Data\0201drawings\Whitehorse\W141\W14101527 Can Wildlife Storage Garage\W14101527 Fig.1_R0.dwg [FIGURE 1] March 17, 2011 - 3:27:42 pm (BY: BUCHAN, CAMERON)

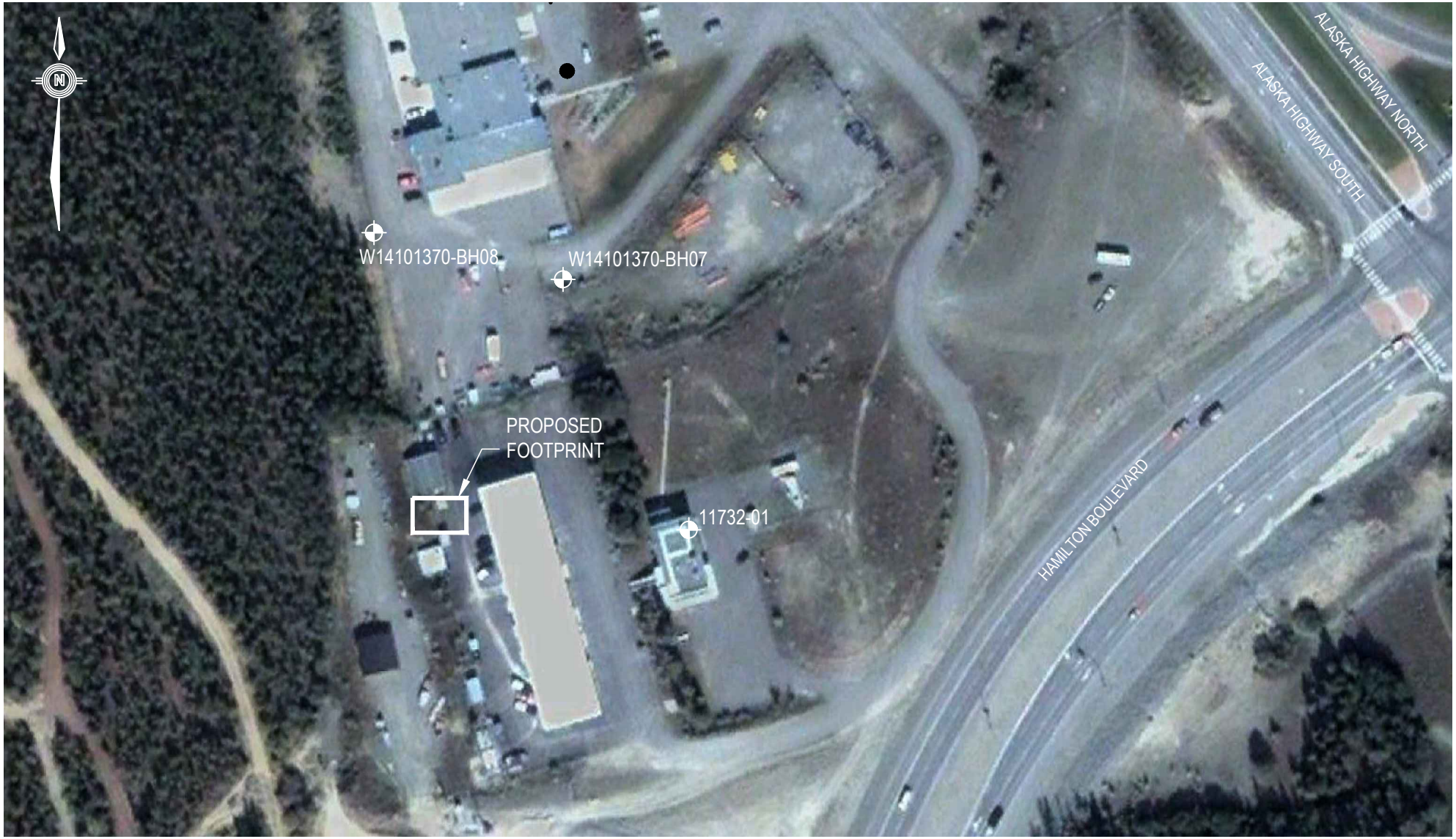

LEGEND

- HISTORICAL BOREHOLE LOCATION (SHOWN WHITE)

0 50
Scale: 1: 1 500 (metres)

CLIENT

ENVIRONMENT CANADA

GEOTECHNICAL EVALUATION - CANADIAN WILDLIFE STORAGE GARAGE - WHITEHORSE, YUKON

SITE PLAN SHOWING BOREHOLE LOCATIONS

eba
A TETRA TECH COMPANY

PROJECT NO.	DWN	CKD	REV
W14101527	CB	CPC	0
OFFICE	DATE		
EBA-WHSE	March 14, 2011		

Figure 1

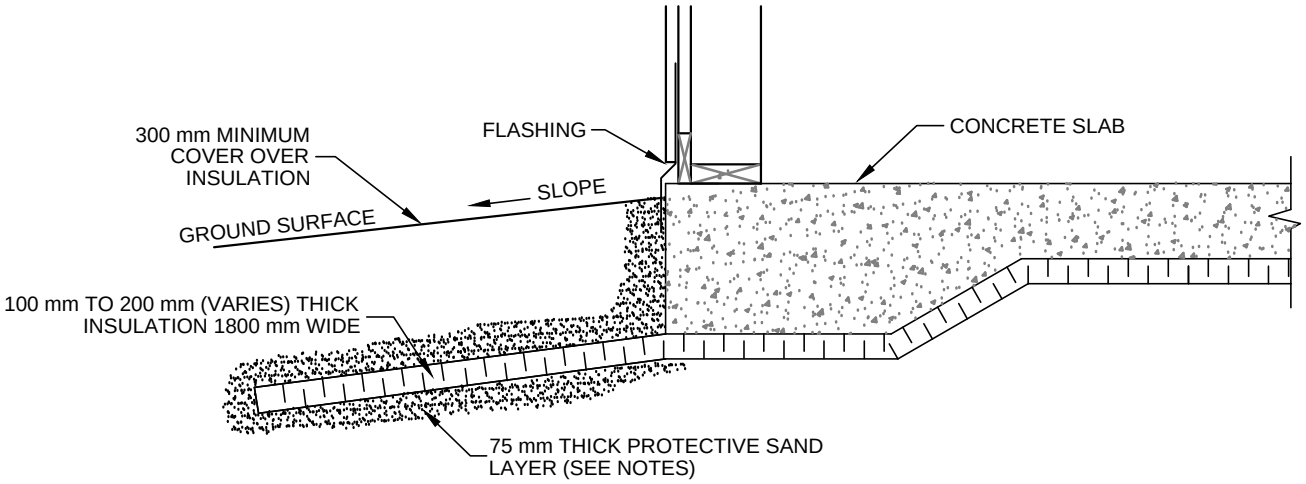

1/1 SECTION - MONOLITHIC SLAB
N.T.S.

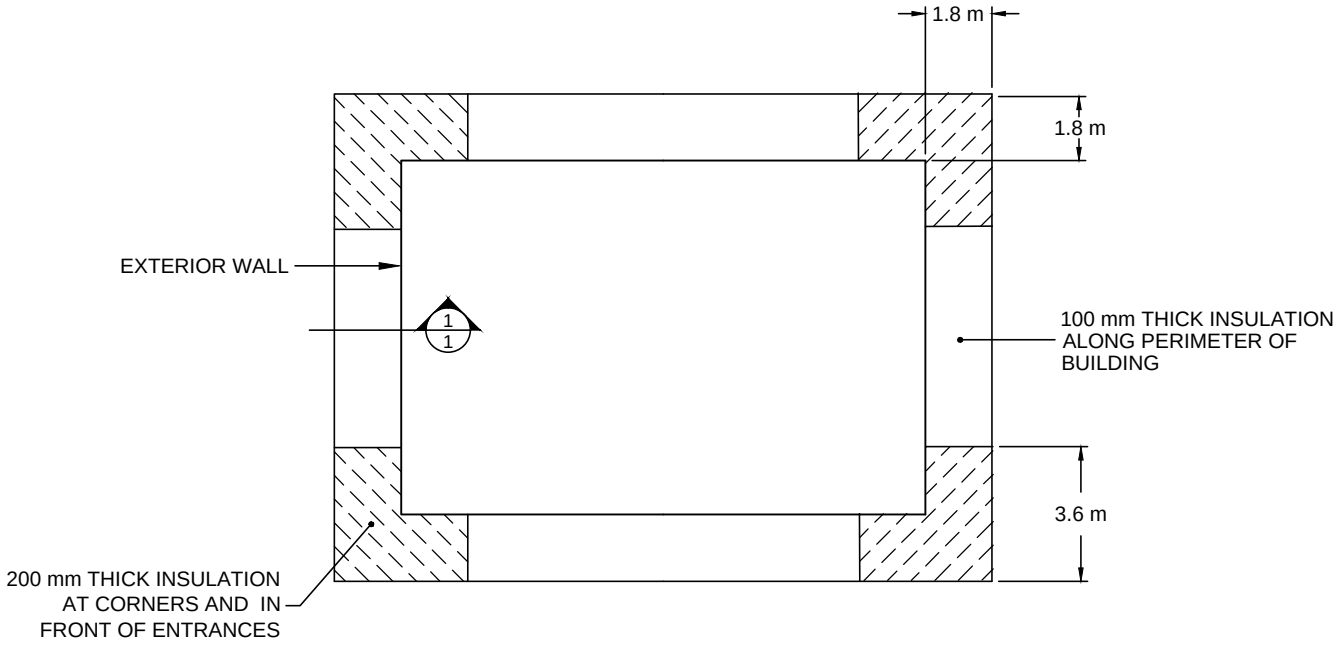

PLAN
N.T.S.

LEGEND

1. THE INSULATION (DOW CHEMICAL HI SERIES STYROFOAM OR POLYURETHANE OR APPROVED EQUIVALENT) SHOULD BE MOISTURE RESISTANT AND SUITABLE FOR BURIAL UNDER VEHICULAR TRAFFIC AREAS.
2. A MINIMUM BEDDING THICKNESS OF 75 mm OF FINE TO MEDIUM GRAINED SAND SHOULD BE PLACED ABOVE AND BELOW THE INSULATION FOR PROTECTION.

CLIENT
Yukon
Highways and Public Works
Property Management Branch

eba
A TETRA TECH COMPANY

GEOTECHNICAL EVALUATION - CANADIAN WILDLIFE STORAGE GARAGE - WHITEHORSE, YUKON

GENERAL DETAILS OF PERIMETER FOUNDATION INSULATION

PROJECT NO.	DWN	CKD	REV
W14101527	CB	CPC	0
OFFICE	DATE		
EBA-WHSE	March 15, 2011		

Figure 2

APPENDIX A

APPENDIX A EBA'S GENERAL CONDITIONS

GENERAL CONDITIONS

GEOTECHNICAL REPORT

This report incorporates and is subject to these “General Conditions”.

1.0 USE OF REPORT AND OWNERSHIP

This geotechnical report pertains to a specific site, a specific development and a specific scope of work. It is not applicable to any other sites nor should it be relied upon for types of development other than that to which it refers. Any variation from the site or development would necessitate a supplementary geotechnical assessment.

This report and the recommendations contained in it are intended for the sole use of EBA’s Client. EBA does not accept any responsibility for the accuracy of any of the data, the analyses or the recommendations contained or referenced in the report when the report is used or relied upon by any party other than EBA’s Client unless otherwise authorized in writing by EBA. Any unauthorized use of the report is at the sole risk of the user.

This report is subject to copyright and shall not be reproduced either wholly or in part without the prior, written permission of EBA. Additional copies of the report, if required, may be obtained upon request.

2.0 ALTERNATE REPORT FORMAT

Where EBA submits both electronic file and hard copy versions of reports, drawings and other project-related documents and deliverables (collectively termed EBA’s instruments of professional service), only the signed and/or sealed versions shall be considered final and legally binding. The original signed and/or sealed version archived by EBA shall be deemed to be the original for the Project.

Both electronic file and hard copy versions of EBA’s instruments of professional service shall not, under any circumstances, no matter who owns or uses them, be altered by any party except EBA. EBA’s instruments of professional service will be used only and exactly as submitted by EBA.

Electronic files submitted by EBA have been prepared and submitted using specific software and hardware systems. EBA makes no representation about the compatibility of these files with the Client’s current or future software and hardware systems.

3.0 ENVIRONMENTAL AND REGULATORY ISSUES

Unless stipulated in the report, EBA has not been retained to investigate, address or consider and has not investigated, addressed or considered any environmental or regulatory issues associated with development on the subject site.

4.0 NATURE AND EXACTNESS OF SOIL AND ROCK DESCRIPTIONS

Classification and identification of soils and rocks are based upon commonly accepted systems and methods employed in professional geotechnical practice. This report contains descriptions of the systems and methods used. Where deviations from the system or method prevail, they are specifically mentioned.

Classification and identification of geological units are judgmental in nature as to both type and condition. EBA does not warrant conditions represented herein as exact, but infers accuracy only to the extent that is common in practice.

Where subsurface conditions encountered during development are different from those described in this report, qualified geotechnical personnel should revisit the site and review recommendations in light of the actual conditions encountered.

5.0 LOGS OF TESTHOLES

The testhole logs are a compilation of conditions and classification of soils and rocks as obtained from field observations and laboratory testing of selected samples. Soil and rock zones have been interpreted. Change from one geological zone to the other, indicated on the logs as a distinct line, can be, in fact, transitional. The extent of transition is interpretive. Any circumstance which requires precise definition of soil or rock zone transition elevations may require further investigation and review.

6.0 STRATIGRAPHIC AND GEOLOGICAL INFORMATION

The stratigraphic and geological information indicated on drawings contained in this report are inferred from logs of test holes and/or soil/rock exposures. Stratigraphy is known only at the locations of the test hole or exposure. Actual geology and stratigraphy between test holes and/or exposures may vary from that shown on these drawings. Natural variations in geological conditions are inherent and are a function of the historic environment. EBA does not represent the conditions illustrated as exact but recognizes that variations will exist. Where knowledge of more precise locations of geological units is necessary, additional investigation and review may be necessary.

7.0 PROTECTION OF EXPOSED GROUND

Excavation and construction operations expose geological materials to climatic elements (freeze/thaw, wet/dry) and/or mechanical disturbance which can cause severe deterioration. Unless otherwise specifically indicated in this report, the walls and floors of excavations must be protected from the elements, particularly moisture, desiccation, frost action and construction traffic.

8.0 SUPPORT OF ADJACENT GROUND AND STRUCTURES

Unless otherwise specifically advised, support of ground and structures adjacent to the anticipated construction and preservation of adjacent ground and structures from the adverse impact of construction activity is required.

9.0 INFLUENCE OF CONSTRUCTION ACTIVITY

There is a direct correlation between construction activity and structural performance of adjacent buildings and other installations. The influence of all anticipated construction activities should be considered by the contractor, owner, architect and prime engineer in consultation with a geotechnical engineer when the final design and construction techniques are known.

10.0 OBSERVATIONS DURING CONSTRUCTION

Because of the nature of geological deposits, the judgmental nature of geotechnical engineering, as well as the potential of adverse circumstances arising from construction activity, observations during site preparation, excavation and construction should be carried out by a geotechnical engineer. These observations may then serve as the basis for confirmation and/or alteration of geotechnical recommendations or design guidelines presented herein.

11.0 DRAINAGE SYSTEMS

Where temporary or permanent drainage systems are installed within or around a structure, the systems which will be installed must protect the structure from loss of ground due to internal erosion and must be designed so as to assure continued performance of the drains. Specific design detail of such systems should be developed or reviewed by the geotechnical engineer. Unless otherwise specified, it is a condition of this report that effective temporary and permanent drainage systems are required and that they must be considered in relation to project purpose and function.

12.0 BEARING CAPACITY

Design bearing capacities, loads and allowable stresses quoted in this report relate to a specific soil or rock type and condition. Construction activity and environmental circumstances can materially change the condition of soil or rock. The elevation at which a soil or rock type occurs is variable. It is a requirement of this report that structural elements be founded in and/or upon geological materials of the type and in the condition assumed. Sufficient observations should be made by qualified geotechnical personnel during construction to assure that the soil and/or rock conditions assumed in this report in fact exist at the site.

13.0 SAMPLES

EBA will retain all soil and rock samples for 30 days after this report is issued. Further storage or transfer of samples can be made at the Client's expense upon written request, otherwise samples will be discarded.

14.0 INFORMATION PROVIDED TO EBA BY OTHERS

During the performance of the work and the preparation of the report, EBA may rely on information provided by persons other than the Client. While EBA endeavours to verify the accuracy of such information when instructed to do so by the Client, EBA accepts no responsibility for the accuracy or the reliability of such information which may affect the report.

ROCK DESCRIPTION TERMS USED ON BOREHOLE LOGS

ESTIMATED MECHANICAL STRENGTH

TERM	UNCONFINED COMPRESSIVE STRENGTH			
Very Low Strength	1	to	4	MPa
Low Strength	4	to	15	MPa
Medium Strength	15	to	50	MPa
High Strength	50	to	200	MPa
Very High Strength	More than 200			MPa

*UCS – unconfined compressive strength; **Correlations determined by Field Identification are approximate.

GRAIN SIZE

NON-CARBONATE DETRITAL SEDIMENTARY ROCKS		OTHER ROCKS	GRAIN SIZE
Conglomerate or Breccia		Very Coarse Grained	More than 80 mm
Conglomerate or Breccia		Coarse Grained	4 to 80 mm
Sandstone [1]		Medium Grained	80 µm to 4 mm
FISSILE	NON-FISSILE		
Silt Shale	Siltstone	Fine Grained	> 2/3 silt-sized (2 to 80 µm)
Mud Shale	Mudstone	Fine Grained	Silt and clay-sized (< 80 µm)
Clay Shale	Claystone	Very Fined Grained	> 2/3 clay-sized (< 2 µm)

[1] Sandstone further subdivided where appropriate into fine, medium, coarse

DISCONTINUITY SPACING

BEDDING	OTHER DISCONTINUITIES	SPACING
Very Thickly Bedded	Very Widely Spaced	More than 2 m
Thickly Bedded	Widely Spaced	600 mm to 2 m
Medium Bedded	Moderately Widely Spaced	200 to 600 mm
Thinly Bedded	Closely Spaced	60 to 200 mm
Very Thinly Bedded	Very Closely Spaced	20 to 60 mm
Laminated	Extremely Closely Spaced	6 to 20 mm
Thinly Laminated	Extremely Closely Spaced	2 to 6 mm
Fissile	Extremely Closely Spaced	Less than 2 mm

ROCK QUALITY

TERM	RQD
Very Poor Quality	0 to 25
Poor Quality	25 to 50
Fair Quality	50 to 75
Good Quality	75 to 90
Excellent Quality	90 to 100

WEATHERED STATE

TERM	DEGREE
Fresh	No visible signs of weathering
Slightly Weathered	Weathering only on open discontinuity surfaces
Moderately Weathered	Rock mass weathered but not friable
Highly Weathered	Rock mass weathered and partly friable
Completely Weathered	Wholly decomposed but texture and structure preserved
Residual Soil	Original rock texture and structure destroyed

CORE RECOVERY

TERM	DESCRIPTION
Total Core Recovery	Total recovery expressed as a percentage of run length
Solid Recovery	Solid recovery expressed as a percentage of run length
Rock Quality Designation (RQD)	Sum of lengths of solid core more than 100 mm long expressed as a percentage of run length
Fracture Index (FI)	Number of breaks per metre of solid core (FI's in excess of 30 denoted as 30+)

MODIFIED UNIFIED SOIL CLASSIFICATION

MAJOR DIVISION			GROUP SYMBOL	TYPICAL DESCRIPTION
COARSE-GRAINED SOILS More than 50% retained on 75 m sieve*	GRAVELS 50% or more of coarse fraction retained on 4.75 mm sieve	CLEAN GRAVELS	GW	Well-graded gravels and gravel-sand mixtures, little or no fines
			GP	Poorly graded gravels and gravel-sand mixtures, little or no fines
		GRAVELS WITH FINES	GM	Silty gravels, gravel-sand-silt mixtures
			GC	Clayey gravels, gravel-sand-clay mixtures
	SANDS More than 50% of coarse fraction passes 4.75 mm sieve	CLEAN SANDS	SW	Well-graded sands and gravelly sands, little or no fines
			SP	Poorly graded sands and gravelly sands, little or no fines
		SANDS WITH FINES	SM	Silty sands, sand-silt mixtures
			SC	Clayey sands, sand-clay mixtures
FINE-GRAINED SOILS (by behavior) 50% or more passes 75 m sieve*	SILTS Liquid limit <50		ML	Inorganic silts, very fine sands, rock flour, silty or clayey fine sands of slight plasticity
	SILTS Liquid limit >50		MH	Inorganic silts, micaceous or diatomaceous fine sands or silts, elastic silts
	CLAYS Above "A" line on plasticity chart negligible organic content Liquid limit <30		CL	Inorganic clays of low plasticity, gravelly clays, sandy clays, silty clays, lean clays
	CLAYS Liquid limit 30-50		CI	Inorganic clays of medium plasticity, silty clays
	CLAYS Liquid limit >50		CH	Inorganic clays of high plasticity, fat clays
	ORGANIC SILTS AND CLAYS Liquid limit <50		OL	Organic silts and organic silty clays of low plasticity
	ORGANIC SILTS AND CLAYS Liquid limit >50		OH	Organic clays of medium to high plasticity
HIGHLY ORGANIC SOILS			PT	Peat and other highly organic soils

LABORATORY CLASSIFICATION CRITERIA

Classification on basis of percentage of fines: GW, GP, SW, SP GM, GC, SM, SC Borderline Classification requiring use of dual symbols	$C_U = D_{60}/D_{10}$ Greater than 4 $C_C = \frac{(D_{30})^2}{D_{10} \times D_{60}}$ Between 1 and 3		
	Not meeting both criteria for GW		
	Atterberg limits plot below "A" line or plasticity index less than 4	Atterberg limits plotting in hatched area are borderline classifications requiring use of dual symbols	
	Atterberg limits plot above "A" line or plasticity index greater than 7		
Less than 5% Pass 75 m sieve More than 12% Pass 75 m sieve 5% to 12% Pass 75 m sieve	$C_U = D_{60}/D_{10}$ Greater than 6 $C_C = \frac{(D_{30})^2}{D_{10} \times D_{60}}$ Between 1 and 3		
	Not meeting both criteria for SW		
	Atterberg limits plot below "A" line or plasticity index less than 4	Atterberg limits plotting in hatched area are borderline classifications requiring use of dual symbols	
	Atterberg limits plot above "A" line or plasticity index greater than 7		

For classification of fine-grained soils and fine fraction of coarse-grained soils.

PLASTICITY CHART

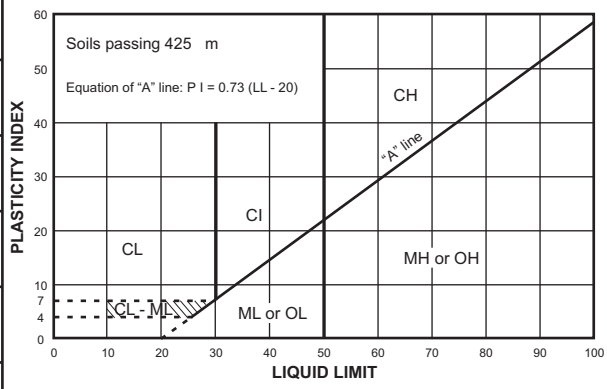

*Based on the material passing the 75 mm sieve
Reference: ASTM Designation D2487, for identification procedure see D2488. USC as modified by PFRA

SOIL COMPONENTS

FRACTION	SIEVE SIZE: PASSING	SIEVE SIZE: RETAINED	DEFINING RANGES OF PERCENTAGE BY MASS OF MINOR COMPONENTS: PERCENTAGE	DEFINING RANGES OF PERCENTAGE BY MASS OF MINOR COMPONENTS: DESCRIPTOR
GRAVEL				
coarse	75 mm	19 mm	>35 %	"and"
fine	19 mm	4.75 mm	21 to 35 %	"y-adjective"
SAND				
coarse	4.75 mm	2.00 mm	10 to 20 %	"some"
medium	2.00 mm	425 m	>0 to 10 %	"trace"
fine	425 m	75 m		
SILT (non plastic) or CLAY (plastic)	75 m		**as above but by behavior**	

OVERSIZE MATERIAL

Rounded or subrounded

COBBLES 75 mm to 300 mm
BOULDERS > 300 mm

Not rounded

ROCK FRAGMENTS >75 mm
ROCKS > 0.76 cubic metre in volume

EBA Engineering Consultants Ltd.

APPENDIX B

APPENDIX B EBA TESTHOLE LOGS AND PARTICLE SIZE DISTRIBUTION RESULTS

GEOTECHNICAL EVALUATION	CLIENT: PUBLIC WORKS CANADA	PROJECT NO. - BOREHOLE NO.
YUKON WEATHER CENTRE	DRILL: CME 750	11732-01
WHITEHORSE, YUKON		

SAMPLE TYPE: DISTURBED, NO RECOVERY, SPT, A-CASING, SHELBY TUBE, CORE

BACKFILL TYPE: BENTONITE, PEA GRAVEL, SLOUGH, GROUT, DRILL CUTTINGS, SAND

Depth (m)	SOIL DESCRIPTION	SAMPLE TYPE	SAMPLE NUMBER	SPT (N)	USC	SOIL SYMBOL	MOISTURE CONTENT	PLASTIC M.C. LIQUID (20 40 60 80)	STANDARD PENETRATION (N) 20 40 60 80 / UNCONFINED (kPa) 50 100 150 200 / POCKET PEN. (kPa) 100 200 300 400	Depth (ft)
0	GRAVEL FILL									0
	SAND - dry, light brown		1		SM		5.9			
	- end of frost									
1										
			2				23			5
	SILT - plastic									
2										
			3	6/150mm			24.7		/150	
3										
			4				25.6			10
4										
			5				26.7			
	- bottom of frost									15
5			6				33			
	END OF BOREHOLE @ 5.0 m		7	5			30.3			
6										20
7										25
8										
9										30
10										33

EBA Engineering Consultants Ltd.	LOGGED BY: CRF	COMPLETION DEPTH: 5.45m
	REVIEWED BY: JRT	COMPLETE: 2/23/1995
	DRAWING NO:	Page 1 of 1

Geotechnical Evaluation	CLIENT: Yukon Government	PROJECT NO. - BOREHOLE NO.
Whitehorse Integrated Emergency Response Facility	DRILL: CME 75 with solid stem augers	W14101370-BH08
Whitehorse, YT	6733101N; 494584E; Zone 8	

SAMPLE TYPE: DISTURBED, NO RECOVERY, SPT, A-CASING, SHELBY TUBE, CORE

BACKFILL TYPE: BENTONITE, PEA GRAVEL, SLOUGH, GROUT, DRILL CUTTINGS, SAND

Depth (m)	SOIL DESCRIPTION	SAMPLE TYPE	MOISTURE CONTENT (PLASTIC — M.C. — LIQUID; 20 40 60 80)	STANDARD PENETRATION (N) 20 40 60 80; UNCONFINED (kPa) 50 100 150 200; POCKET PEN. (kPa) 100 200 300 400	Depth (ft)
0	GRAVEL (FILL) - sandy, coarse grained, dry, grey				0
1	END OF BOREHOLE @ 1.0 m (Refusal on Bedrock)				5
2					
3					10
4					
5					15
6					20
7					
8					25
9					30
10					33

EBA Engineering Consultants Ltd.

LOGGED BY: DAN	COMPLETION DEPTH: 1m
REVIEWED BY: CPC	COMPLETE: 8/6/2010
DRAWING NO:	Page 1 of 1

Geotechnical Evaluation	CLIENT: Yukon Government	PROJECT NO. - BOREHOLE NO.
Whitehorse Integrated Emergency Response Facility	DRILL: CME 75 with solid stem augers	W14101370-BH07
Whitehorse, YT	6733097N; 494633E; Zone 8	

SAMPLE TYPE: DISTURBED, NO RECOVERY, SPT, A-CASING, SHELBY TUBE, CORE

BACKFILL TYPE: BENTONITE, PEA GRAVEL, SLOUGH, GROUT, DRILL CUTTINGS, SAND

Depth (m)	SOIL DESCRIPTION	SAMPLE TYPE	MOISTURE CONTENT	PLASTIC M.C. LIQUID (20 40 60 80)	STANDARD PENETRATION (N) 20 40 60 80 / UNCONFINED (kPa) 50 100 150 200 / POCKET PEN. (kPa) 100 200 300 400	Depth (ft)
0	SAND - gravelly, trace silt, loose, medium grained, damp, brown					0
1			3.6			5
2	SILT - some to trace clay, trace sand, firm to soft, low plasticity (est.), damp, to moist, light brown					
3			27.9			10
4	- moist		33.1			15
5						
6			32			20
7	SAND - some silt, loose, medium grained, damp, light brown		5.6			25
8	- some gravel, trace silt, trace clay					
9			6			30
10	END OF BOREHOLE @ 9.5 m (Refusal on Bedrock)					33

EBA Engineering Consultants Ltd.	LOGGED BY: DAN	COMPLETION DEPTH: 9.5m
	REVIEWED BY: CPC	COMPLETE: 8/6/2010
	DRAWING NO:	Page 1 of 1