Public Works and Government Services Canada | Travaux publics et Services gouvernementaux Canada

RETURN BIDS TO:
RETOURNER LES SOUMISSIONS À:

Bid Receiving - PWGSC / Réception des soumissions - TPSGC
11 Laurier St./ 11, rue Laurier
Place du Portage, Phase III
Core 0B2 / Noyau 0B2
Gatineau, Québec K1A 0S5
Bid Fax: (819) 997-9776

REQUEST FOR PROPOSAL
DEMANDE DE PROPOSITION

Proposal To: Public Works and Government Services Canada

We hereby offer to sell to Her Majesty the Queen in right of Canada, in accordance with the terms and conditions set out herein, referred to herein or attached hereto, the goods, services, and construction listed herein and on any attached sheets at the price(s) set out therefor.

Proposition aux: Travaux Publics et Services Gouvernementaux Canada

Nous offrons par la présente de vendre à Sa Majesté la Reine du chef du Canada, aux conditions énoncées ou incluses par référence dans la présente et aux annexes ci-jointes, les biens, services et construction énumérés ici sur toute feuille ci-annexée, au(x) prix indiqué(s).

Comments - Commentaires

Title - Sujet
Soft Body Armour System

Solicitation No. - N° de l'invitation
W8476-165488/A

Date
2017-05-19

Client Reference No. - N° de référence du client
W8476-165488

GETS Reference No. - N° de référence de SEAG
PW-$$PR-760-72899

File No. - N° de dossier
pr760.W8476-165488

CCC No./N° CCC - FMS No./N° VME

Solicitation Closes - L'invitation prend fin
at - à 02:00 PM
on - le 2017-08-02

Time Zone
Fuseau horaire
Eastern Daylight Saving Time EDT

F.O.B. - F.A.B. Specified Herein - Précisé dans les présentes
Plant-Usine: ☐ **Destination:** ☐ **Other-Autre:** ☑

Address Enquiries to: - Adresser toutes questions à:
Richard, Josette

Buyer Id - Id de l'acheteur
pr760

Telephone No. - N° de téléphone
(613) 462-4128 ( )

FAX No. - N° de FAX
(819) 956-5454

Destination - of Goods, Services, and Construction:
Destination - des biens, services et construction:
25 Canadian Forces Supply Depot
6363 NOTRE DAME EST
MONTREAL
QC
H1N3V9
Canada

Instructions: See Herein

Instructions: Voir aux présentes

Vendor/Firm Name and Address
Raison sociale et adresse du fournisseur/de l'entrepreneur

Delivery Required - Livraison exigée
See Herein

Delivery Offered - Livraison proposée

Vendor/Firm Name and Address
Raison sociale et adresse du fournisseur/de l'entrepreneur

Telephone No. - N° de téléphone
Facsimile No. - N° de télécopieur

Name and title of person authorized to sign on behalf of Vendor/Firm (type or print)
Nom et titre de la personne autorisée à signer au nom du fournisseur/ de l'entrepreneur (taper ou écrire en caractères d'imprimerie)

Signature **Date**

Issuing Office - Bureau de distribution
Clothing and Textiles Division / Division des vêtements et des textiles
11 Laurier St./ 11, rue Laurier
6A2, Place du Portage
Gatineau, Québec K1A 0S5

Canada

TABLE OF CONTENTS

LIST OF ANNEXES:

LIST OF APPENDICES :

PART 1 - GENERAL INFORMATION

1.1 Security Requirement

There is no security requirement associated with this bid solicitation.

1.2 Requirement

The “Requirement” is detailed under the Annex A of the resulting contract clauses.

1.3 Debriefings

Bidders may request a debriefing on the results of the bid solicitation process. Bidders should make the request to the Contracting Authority within 15 working days from receipt of the results of the bid solicitation process. The debriefing may be in writing, by telephone or in person.

1.4 Trade Agreements

The requirement is subject to the provisions of the Agreement on Internal Trade (AIT).

1.5 Canadian Content

The requirement is subject to a preference for Canadian goods and/or services.

PART 2 - BIDDER INSTRUCTIONS

2.1 Standard Instructions, Clauses and Conditions

All instructions, clauses and conditions identified in the bid solicitation by number, date and title are set out in the *Standard Acquisition Clauses and Conditions Manual* (https://buyandsell.gc.ca/policy-and-guidelines/standard-acquisition-clauses-and-conditions-manual) issued by Public Works and Government Services Canada.

Bidders who submit a bid agree to be bound by the instructions, clauses and conditions of the bid solicitation and accept the clauses and conditions of the resulting contract.

The 2003 (2017/04/27) Standard Instructions - Goods or Services - Competitive Requirements, are incorporated by reference into and form part of the bid solicitation.

Subsection 5.4 of 2003, Standard Instructions - Goods or Services - Competitive Requirements, is amended as follows:

Delete: 60 days
Insert: 180 days

2.2 Submission of Bids

Bids must be submitted only to Public Works and Government Services Canada (PWGSC) Bid Receiving Unit by the date, time and place indicated on page 1 of the bid solicitation.

Due to the nature of the bid solicitation, bids transmitted by facsimile to PWGSC will not be accepted.

2.3 Enquiries - Bid Solicitation

All enquiries must be submitted in writing to the Contracting Authority no later than seven (7) calendar days before the bid closing date. Enquiries received after that time may not be answered.

Bidders should reference as accurately as possible the numbered item of the bid solicitation to which the enquiry relates. Care should be taken by Bidders to explain each question in sufficient detail in order to enable Canada to provide an accurate answer. Technical enquiries that are of a proprietary nature must be clearly marked "proprietary" at each relevant item. Items identified as "proprietary" will be treated as such except where Canada determines that the enquiry is not of a proprietary nature. Canada may edit the question(s) or may request that the Bidder do so, so that the proprietary nature of the question(s) is eliminated, and the enquiry can be answered to all Bidders. Enquiries not submitted in a form that can be distributed to all Bidders may not be answered by Canada.

2.4 Applicable Laws

Any resulting contract must be interpreted and governed, and the relations between the parties determined, by the laws in force in Ontario.

Bidders may, at their discretion, substitute the applicable laws of a Canadian province or territory of their choice without affecting the validity of their bid, by deleting the name of the Canadian province or territory specified and inserting the name of the Canadian province or territory of their

choice. If no change is made, it acknowledges that the applicable laws specified are acceptable to the Bidders.

2.5 Usage of Government Furnished Material (GFM)

Government-Furnished Material (GFM) must be used to support the manufacture of the Pre-Award Samples. For additional details, please refer to Annex D, para. 9.1.

In order to receive the required GFM against this solicitation, Bidders must send their request by email to josette.richard@tpsgc-pwgsc.gc.ca and provide the following details:

- Company Name
- Complete mailing & physical address (p.o. box numbers not acceptable)
- Area code and telephone number
- Contact name
- E-mail address
- Solicitation Number & Closing Date

It is imperative that the request be done as soon as possible to ensure timely receipt. Notwithstanding Canada must not be held responsible for untimely release of the technical data.

2.5.1 Government Furnished Material (GFM) - Return to Sender

The GFM which may have been sent to you, is to be returned to the sender, if you are the unsuccessful Bidder. The GFM is not to be mutilated or cut, and must be returned in the same condition as sent to the Bidder.

2.6 Specifications and Standards

2.6.1 United States Military Specifications and Standards

The Bidder is responsible for obtaining copies of all United States (US) military specifications and standards which may be applicable to the requirement. These specifications and standards are available commercially, or may be obtained by visiting the US Department of Defense Website, at the following address**: http://assistdocs.com/search/search_basic.cfm**

2.6.2 Canadian General Standards Board (CGSB) - Standards

A copy of the CGSB Standards referred to in the bid solicitation is available and may be purchased from:

Canadian General Standards Board
Place du Portage III, 6B1
11 Laurier Street
Gatineau, Québec
Telephone: (819) 956-0425 or 1-800-665-CGSB (Canada only)
Fax: (819) 956-5740
E-mail: ncr.cgsb-ongc@pwgsc-tpsgc.gc.ca
CGSB Website: http://www.tpsgc-pwgsc.gc.ca/ongc-cgsb/index-eng.html

2.7 Transportation Costs Information

The Bidder is requested to provide the following information concerning transportation costs for the delivery of the units to destination:

(a) shipping weight by unit; _____
(b) number of items by unit; _____
(c) cubic measurement by unit; _____
(d) number of units per shipment: _____

(e) name of shipping point; _____
(f) recommended method of shipment and carrier _____
(g) Unit cost per Destination $_____
(h) Total cost $_____

PART 3 - BID PREPARATION INSTRUCTIONS

3.1 Bid Preparation Instructions

Canada requests that Bidders provide their bid in separately bound sections as follows:

Section I: Technical Bid (2 hard copies and 1 soft copy on USB key)
Section II: Financial Bid (1 hard copy and 1 soft copy on USB key)
Section III: Certifications (1 hard copy)

If there is a discrepancy between the wording of the soft copy and the hard copy, the wording of the hard copy will have priority over the wording of the soft copy.

Prices must appear in the financial bid only. No prices must be indicated in any other section of the bid.

Canada requests that Bidders follow the format instructions described below in the preparation of their bid:

(a) use 8.5 x 11 inch (216 mm x 279 mm) paper;
(b) use a numbering system that corresponds to the bid solicitation;

In April 2006, Canada issued a policy directing federal departments and agencies to take the necessary steps to incorporate environmental considerations into the procurement process Policy on Green Procurement (http://www.tpsgc-pwgsc.gc.ca/ecologisation-greening/achats-procurement/politique-policy-eng.html). To assist Canada in reaching its objectives, Bidders should:

1) use 8.5 x 11 inch (216 mm x 279 mm) paper containing fibre certified as originating from a sustainably-managed forest and containing minimum 30% recycled content; and

2) if possible, use an environmentally-preferable format including black and white printing instead of colour printing, printing double sided/duplex, using staples or clips instead of cerlox, duotangs or binders.

3) Green Initiatives (for PWGSC information only)
Bidders are requested to provide details of their policies and practices in relation to the following initiatives:

- environmentally responsible manufacturing;
- environmentally responsible waste disposal;
- waste reduction;
- packaging;
- re-use strategies;
- recycling.

Section I: Technical Bid
In their technical bid, Bidders should explain and demonstrate how they propose to meet the requirements and how they will carry out the Work.

Section II: Financial Bid
Bidders must submit their financial bid in accordance with the Basis of Payment. The total amount of Applicable Taxes must be shown separately.

3.1.1 Electronic Payment of Invoices – Bid

If you are willing to accept payment of invoices by Electronic Payment Instruments, complete Appendix 1 to Part 3 - Electronic Payment Instruments, to identify which ones are accepted.

If Appendix 1 to Part 3 - Electronic Payment Instruments is not completed, it will be considered as if Electronic Payment Instruments are not being accepted for payment of invoices.

Acceptance of Electronic Payment Instruments will not be considered as an evaluation criterion.

3.1.2 Exchange Rate Fluctuation

C3011T	2013/11/06	Exchange Rate Fluctuation

Section III: Certifications
Bidders must submit the certifications and additional information required under Part 5.

PART 4 - EVALUATION PROCEDURES AND BASIS OF SELECTION

4.1 Evaluation Procedures

(a) Bids will be assessed in accordance with the entire requirement of the bid solicitation including the technical and financial evaluation criteria.

(b) An evaluation team composed of representatives of Canada will evaluate the bids.

(c) The evaluation team will determine first if there are two or more bids with a valid Canadian Content certification. In that event, the evaluation process will be limited to the bids with the certification; otherwise, all bids will be evaluated. If some of the bids with a valid certification are declared non-responsive, or are withdrawn, and less than two responsive bids with a valid certification remain, the evaluation will continue among those bids with a valid certification. If all bids with a valid certification are subsequently declared non-responsive, or are withdrawn, then all the other bids received will be evaluated.

4.1.1 Technical Evaluation

4.1.1.1 Mandatory and Rated Technical Criteria

As part of the technical evaluation, to confirm a Bidder's capability of meeting the technical requirements, the Bidder will be subjected to a five (5) phase evaluation process as detailed in Annex D.

To support each phase of the evaluation, the Bidder must provide with its bid all mandatory technical deliverables as described in Annex D at no charge to Canada.

At any time during the evaluation process, if any documentation is missing, the Contracting Authority will inform the Bidder in writing and provide the Bidder with two (2) working days from the request to submit the missing documentation. Failure to submit the required bid technical deliverables within the specified timeframe will result in the bid being declared non-responsive.

The deliverables submitted by the Bidder will remain the property of Canada. The requirement for bid submission deliverables will not relieve the successful bidder from submitting samples and supporting documentation as required by the contract terms or from strictly adhering to the technical requirement of this Request for Proposal and any resultant contract.

CERTIFICATE OF COMPLIANCE - DEFINITION
A Certificate of Compliance is a written statement from an appropriate official of the component manufacturer attesting the full compliance of the component(s) to the specification. This document must be on official company stationery; it must be dated within six (6) months of the Request for Proposal posting date; it must make reference to the applicable specification and have the original signature of the company's designated representative. Canada reserves the right to verify the statements made in the Certificate of Compliance. Full test results, demonstrating the product's compliance, will be accepted in lieu of a Certificate of Compliance.

LABORATORY ANALYSIS - DEFINITION
Laboratory analysis of the product offered showing complete test results of physical properties detailed in the technical requirement must be provided with the pre-award sample. Testing must be performed by an independent accredited laboratory establishment and must be in accordance with the test methods detailed in the Requirement. The laboratory report and test results must be dated after Request for Proposal posting date.

4.1.2 Financial Evaluation

4.1.2.1 Mandatory Financial Criteria

(a) The Bidder must submit firm unit price(s) in Canadian dollars, applicable taxes are excluded, DDP (Montreal, QC) Incoterms 2000, transportation costs included, all applicable Customs Duties and Excise taxes included.

(b) The Bidder must submit firm unit pricing for all items including option quantities. The Bidder is requested to quote firm unit pricing at no more than two decimal points.

4.1.2.2 SACC MANUAL CLAUSE

A9033T 2012/07/16 Financial Capability

4.2 Basis of Selection

1. To be declared responsive, a bid must:

   a) comply with all the requirements of the bid solicitation; and

   b) meet all mandatory technical evaluation criteria; and

   c) obtain the required minimum points for the technical evaluation criteria which are subject to point rating.

2. Bids not meeting (a) or (b) or (c) will be declared non-responsive. The responsive bid with the lowest evaluated aggregate price will be recommended for award of a contract. Evaluation will be established using the firm quantities and 100% of the option quantities.

4.3 Contract Financial Security

1. If this bid is accepted, the Bidder may be required to provide contract financial security, after the bid closing date and within 10 calendar days from receipt of a written request from the Contracting Authority.
   (a) a security deposit as defined in clause “Security Deposit Definition” in the amount of up to ten percent (10%) of the contract price.

2. Security deposits in the form of government guaranteed bonds with coupons attached will be accepted only if all coupons that are unmatured, at the time the security deposit is provided, are attached to the bonds. The Contractor must provide written instructions concerning the action to be taken with respect to coupons that will mature while the bonds are pledged as security, when such coupons are in excess of the security deposit requirement.

3. If Canada does not receive the required financial security within the specified period, Canada may, as its discretion, accept another offer, issue a new bid solicitation, award a contract or reject all the bids.

4.4 Security Deposit Definition

1. "security deposit" means
   (a) a bill of exchange that is payable to the Receiver General for Canada, and certified by an approved financial institution or drawn by an approved financial institution on itself; or
   (b) a Government guaranteed bond; or
   (c) an irrevocable standby letter of credit, or
   (d) such other security as may be considered appropriate by the Contracting Authority and approved by Treasury Board;

2. "approved financial institution" means
   (a) any corporation or institution that is a member of the Canadian Payments Association;
   (b) a corporation that accepts deposits that are insured by the Canada Deposit Insurance Corporation or the “Régie de l'assurance-dépôts du Québec” to the maximum permitted by law;
   (c) a credit union as defined in paragraph 137(6) the *Income Tax Act*;
   (d) a corporation that accepts deposits from the public, if repayment of the deposits is guaranteed by Canadian province or territory; or
   (e) the Canada Post Corporation.

3. "government guaranteed bond" means a bond of the Government of Canada or a bond unconditionally guaranteed as to principal and interest by the Government of Canada that is:
   (a) payable to bearer;
   (b) accompanied by a duly executed instrument of transfer of the bond to the Receiver General for Canada in accordance with the *Domestic Bonds of Canada Regulations;*
   (c) registered in the name of the Receiver General for Canada.

4. "irrevocable standby letter of credit"
   (a) means any arrangement, however named or described, whereby a financial institution (the "Issuer"), acting at the request and on the instructions of a customer (the "Applicant"), or on its behalf,
      (i) will make a payment to or to the order of Canada, as the beneficiary;
      (ii) will accept and pay bills of exchange drawn by Canada;
      (iii) authorizes another financial institution to effect such payment, or accept and pay such bills of exchange; or
      (iv) authorizes another financial institution to negotiate, against written demand(s) for payment, provided that the conditions of the letter of credit are complied with.
   (b) must state the face amount which may be drawn against it;
   (c) must state its expiry date;
   (d) must provide for sight payment to the Receiver General for Canada by way of the financial institution's draft against presentation of a written demand for payment signed by the authorized departmental representative identified in the letter of credit by his/her office;
   (e) must provide that more than one written demand for payment may be presented subject to the sum of those demands not exceeding the face amount of the letter of credit;
   (f) must provide that it is subject to the International Chamber of Commerce (ICC) Uniform Customs and Practice (UCP) for Documentary Credits, 2007 Revision, ICC Publication No. 600. Pursuant to the ICC UCP, a credit is irrevocable even if there is no indication to that effect; and
   (g) must be issued (Issuer) or confirmed (Confirmer), in either official language, by a financial institution that is a member of the Canadian Payments Association and is on the letterhead of the Issuer or Confirmer. The format is left to the discretion of the Issuer or Confirmer.

PART 5 – CERTIFICATIONS AND ADDITIONAL INFORMATION

Bidders must provide the required certifications and additional information to be awarded a contract.

The certifications provided by Bidders to Canada are subject to verification by Canada at all times. Unless specified otherwise, Canada will declare a bid non-responsive, or will declare a contractor in default if any certification made by the Bidder is found to be untrue whether made knowingly or unknowingly, during the bid evaluation period or during the contract period.

The Contracting Authority will have the right to ask for additional information to verify the Bidder's certifications. Failure to comply and to cooperate with any request or requirement imposed by the Contracting Authority will render the bid non-responsive or constitute a default under the Contract

5.1 Certifications Required with the Bid

Bidders must submit the following duly completed certifications as part of their bid.

5.1.1 Integrity Provisions - Declaration of Convicted Offences

In accordance with the *Ineligibility and Suspension Policy* (http://www.tpsgc-pwgsc.gc.ca/ci-if/politique-policy-eng.html), the Bidder must provide with its bid the required documentation, as applicable, to be given further consideration in the procurement process.

5.1.2 Additional Certifications Required with the Bid

5.1.2.1 Canadian Content Certification

SACC Manual clause A3050T (2014/11/27) Canadian Content Definition

Canadian Content Certification
This procurement is conditionally limited to Canadian goods.

Subject to the evaluation procedures contained in the bid solicitation, bidders acknowledge that only bids with a certification that the good(s) offered are Canadian goods, as defined in clause A3050T, may be considered.

Failure to provide this certification completed with the bid will result in the good(s) offered being treated as non-Canadian goods.

The Bidder certifies that:
( ) the good(s) offered are Canadian goods as defined in paragraph 1 of clause A3050T.

Plant Location:
Items will be manufactured at: _____

5.2 Certifications Precedent to Contract Award and Additional Information

The certifications and additional information listed below should be submitted with the bid, but may be submitted afterwards. If any of these required certifications or additional information is not completed and submitted as requested, the Contracting Authority will inform the Bidder of a time frame within which to provide the information. Failure to provide the certifications or the additional information listed below within the time frame provided will render the bid non-responsive.

5.2.1 Integrity Provisions – Required Documentation

In accordance with the *Ineligibility and Suspension Policy* (http://www.tpsgc-pwgsc.gc.ca/ci-if/politique-policy-eng.html), the Bidder must provide the required documentation, as applicable, to be given further consideration in the procurement process.

5.2.2 Federal Contractors Program for Employment Equity - Bid Certification

By submitting a bid, the Bidder certifies that the Bidder, and any of the Bidder's members if the Bidder is a Joint Venture, is not named on the Federal Contractors Program (FCP) for employment equity "FCP Limited Eligibility to Bid" list available at the bottom of the page of the Employment and Social Development Canada (ESDC) - Labour's website (http://www.esdc.gc.ca/en/jobs/workplace/human_rights/employment_equity/federal_contractor_program.page?&_ga=1.229006812.1158694905.1413548969).

Canada will have the right to declare a bid non-responsive if the Bidder, or any member of the Bidder if the Bidder is a Joint Venture, appears on the “FCP Limited Eligibility to Bid“ list at the time of contract award.

5.2.3 Sample(s) and Production Certification

The Bidder certifies that:

( ) the manufacturer that produced the pre-award samples will remain unchanged for the pre-production samples and full production of the contract quantity.

PART 6 - RESULTING CONTRACT CLAUSES

The following clauses and conditions apply to and form part of any contract resulting from the bid solicitation.

6.1 Security Requirements

There is no security requirement applicable to the Contract.

6.2 Requirement

The Contractor must provide the items detailed under the “Requirement” at Annex A.

6.3 Standard Clauses and Conditions

All clauses and conditions identified in the Contract by number, date and title are set out in the *Standard Acquisition Clauses and Conditions Manual* (https://buyandsell.gc.ca/policy-and-guidelines/standard-acquisition-clauses-and-conditions-manual) issued by Public Works and Government Services Canada.

6.3.1 General Conditions

2030 (2016/04/04), General Conditions - Goods (Higher Complexity), apply to and form part of the Contract.

6.4 Term of Contract

6.4.1 Delivery - Firm Quantity - Phased (identified as item 01 in Annex A)

The first delivery must be made within _____ calendar days from the effective date of the Contract. The quantity delivered must be _____ units. The balance must be delivered at the rate of _____ units weekly after the first delivery until completion of the Contract.

6.4.2 Delivery - Option Quantity (identified as item 02 to 08a in Annex A)

a) Item 02 - External Carrier Rear:
The delivery of the option quantity must commence within _____ calendar days from receipt of the contract amendment and after final delivery of the contract quantity. The quantity delivered must be _____ units. The balance must be shipped at a rate of _____ units/each/pairs/sets weekly after the first delivery until completion of the option quantity.

b) Item 03 - Ballistic Panel Rear :
The delivery of the option quantity must commence within _____ calendar days from receipt of the contract amendment and after final delivery of the contract quantity. The quantity delivered must be _____ units. The balance must be shipped at a rate of _____ units/each/pairs/sets weekly after the first delivery until completion of the option quantity.

c) Item 04 - External Carrier Front:
The delivery of the option quantity must commence within _____ calendar days from receipt of the contract amendment and after final delivery of the contract quantity. The quantity delivered must be _____ units. The balance must be shipped at a rate of _____ units/each/pairs/sets weekly after the first delivery until completion of the option quantity.

d) Item 05 - Ballistic Panel Front:
The delivery of the option quantity must commence within _____ calendar days from receipt of the contract amendment and after final delivery of the contract quantity. The quantity delivered must be _____ units. The balance must be shipped at a rate of _____ units/each/pairs/sets weekly after the first delivery until completion of the option quantity.

e) Item 06 - Plate Carrier Rear:
The delivery of the option quantity must commence within _____ calendar days from receipt of the contract amendment and after final delivery of the contract quantity. The quantity delivered must be _____ units. The balance must be shipped at a rate of _____ units/each/pairs/sets weekly after the first delivery until completion of the option quantity.

f) Item 07 - Plate Carrier Front:
The delivery of the option quantity must commence within _____ calendar days from receipt of the contract amendment and after final delivery of the contract quantity. The quantity delivered must be _____ units. The balance must be shipped at a rate of _____ units/each/pairs/sets weekly after the first delivery until completion of the option quantity.

g) Item 08a - Sniper Body Armour System (inclusive of all related components):
The delivery of the option quantity must commence within _____ calendar days from receipt of the contract amendment and after final delivery of the contract quantity. The quantity delivered must be _____ units. The balance must be shipped at a rate of _____ units/each/pairs/sets weekly after the first delivery until completion of the option quantity.

6.4.3 Delivery - Appointments
The Contractor must make deliveries to Canadian Forces (CF) Supply Depots by appointment only. The Contractor or its carrier must arrange delivery appointments by contacting the Depot Traffic Section at the appropriate location shown below. The consignee may refuse shipments when prior arrangements have not been made.

(a) 25 CF Supply Depot Montreal
Montreal, QC.
514-252-2777, ext. 2363
25dfactrafficrdv@forces.gc.ca

6.4.4 Preparation for Delivery

The Contractor must prepare all items for delivery in accordance with the latest issue of the Canadian Forces Packaging Specification D-LM-008-036/SF-000, DND Minimum Requirements for Manufacturer's Standard Pack.

6.4.5 Bulk Shipments

For bulk shipments, all cartons must be shipped on 40" x 48" pallets shrink-wrapped or equivalent with overall height not to exceed 42".

6.4.6 Shipping Instructions - Delivery at Destination

1. Goods must be consigned to the destination specified in the Contract and delivered:

(a) Delivered Duty Paid (DDP) (Montreal, QC) Incoterms 2000 for shipments from commercial contractor.

6.4.7 Packaging - Commercial

Packing must be in accordance with standard commercial practice to ensure safe delivery at destination.

6.4.8 SACC Manual Clauses

D2025C	2013/11/06	Wood Packaging Materials
D5545C	2010/08/16	ISO 9001:2008 - Quality Management Systems - Requirements (QAC C)
D6010C	2007/11/30	Palletization
D9002C	2007/11/30	Incomplete Assemblies
B7500C	2006/06/16	Excess Goods
D2000C	2007/11/30	Marking
D2001C	2007/11/30	Labelling

6.5 Authorities

6.5.1 Contracting Authority

The Contracting Authority for the Contract is:

Josette Richard
Public Works and Government Services Canada
Acquisitions Branch
Commercial and Consumer Products Directorate (CCPD)
Clothing & Textiles Division
Place du Portage, Phase III, 6A2
11 Laurier Street
Gatineau, Quebec K1A 0S5
Telephone : 613-462-4128 Facsimile: 819-956-5454
E-mail address: josette.richard@tpsgc-pwgsc.gc.ca

The Contracting Authority is responsible for the management of the Contract and any changes to the Contract must be authorized in writing by the Contracting Authority. The Contractor must not perform work in excess of or outside the scope of the Contract based on verbal or written requests or instructions from anybody other than the Contracting Authority.

6.5.2 Technical Authority

The Technical Authority for this Contract is:

Mailing/Shipping Address
Department of National Defence
101 Colonel By Drive
Ottawa, Ontario
K1A 0K2
Attn: DSSPM _____(to be advised at contract)

The Technical Authority is the representative of the department or agency for whom the Work is being carried out under the Contract and is responsible for all matters concerning the technical content of the Work under the Contract. Technical matters may be discussed with the Technical Authority, however the Technical Authority has no authority to authorize changes to the scope of the Work. Changes to the scope of the Work can only be made through a contract amendment issued by the Contracting Authority.

6.5.3 Procurement Authority
The Procurement Authority for the Contract is: (to be advised at contract)

The Procurement Authority is the representative of the department or agency for whom the Work is being carried out under the Contract. The Procurement Authority is responsible for the implementation of tools and processes required for the administration of the Contract. The Contractor may discuss administrative matters identified in the Contract with the Procurement Authority however the Procurement Authority has no authority to authorize changes to the scope of the Work. Changes to the scope of Work can only be made through a contract amendment issued by the Contracting Authority.

6.5.4 Contractor's Representative
The person responsible for :

General enquiries
Name: _____
Telephone No.: _____
Facsimile No.: _____
E-mail address: _____

Delivery follow-up
Name: _____
Telephone No.: _____
Facsimile No.: _____
E-mail address: _____

6.6 Payment

6.6.1 Basis of Payment – Firm Unit Prices
In consideration of the Contractor satisfactorily completing all of its obligations under the Contract, the Contractor will be paid firm unit prices, as specified in Annex A for a cost of $ (*amount to be inserted at contract award*). Customs duties are included and applicable taxes are extra.

Canada will not pay the Contractor for any design changes, modifications or interpretations of the Work, unless they have been approved, in writing, by the Contracting Authority before their incorporation into the Work.

6.6.2 SACC Manual Clauses
H1001C 2008/05/12 Multiple Payments

6.6.3 Electronic Payment of Invoices – Contract
The Contractor accepts to be paid using any of the following Electronic Payment Instrument(s): (to be advised at contract)

6.7 Invoicing Instructions

1. The Contractor must submit invoices in accordance with the section entitled “Invoice Submission” of the general conditions. Invoices cannot be submitted until all work identified in the invoice is completed.

2. Invoices must be distributed as follows:
a) One (1) copy must be forwarded to the following address :

National Defence Headquarters
MGen George R. Pearkes Building
101 Colonel By Drive
Ottawa, ON K1A 0K2
Attn: DLP _____
Email: _____ (to be inserted at contract award)

(b) One (1) copy must be forwarded to the Contracting Authority identified under the section entitled "Authorities" of the Contract.

(c) The original and one (1) copy must be forwarded to the consignee for certification and payment.

6.8 Certifications and Additional Information

6.8.1 Compliance
Unless specified otherwise, the continuous compliance with the certifications provided by the Contractor in its bid or precedent to contract award, and the ongoing cooperation in providing additional information are conditions of the Contract and failure to comply will constitute the Contractor in default. Certifications are subject to verification by Canada during the entire period of the Contract.

6.8.2 SACC Manual Clauses
A3060C 2008/05/12 Canadian Content Certification

6.9 Applicable Laws
The Contract must be interpreted and governed, and the relations between the parties determined, by the laws in force in Ontario.

6.10 Priority of Documents
If there is a discrepancy between the wording of any documents that appear on the list, the wording of the document that first appears on the list has priority over the wording of any document that subsequently appears on the list.

a) the Articles of Agreement;

b) the general conditions 2030 (2016/04/04), General Conditions - Goods (Higher Complexity);
c) Annex A, Requirement;
d) Annex B, Statement of Work;
e) Annex C-1, C-2, C-3, Purchase Descriptions;
e) the Contractor's bid dated _____ .

6.11 Defence Contract
SACC Manual clause A9006C (2012/07/16) Defence Contract

6.12 SACC Manual Clauses
C2610C 2007/11/30 Customs Duties - DND - Importer
C2800C 2013/01/28 Priority Rating
C2801C 2014/11/27 Priority Rating - Canadian-based Contractors

6.13 Materials: Contrator Total Supply
The Contractor will be responsible for obtaining all materials required in the manufacture of the items specified. The delivery stated for the items allows the necessary time to obtain such materials.

6.14 Procedures for Design Change/Deviations
The Contractor must follow these procedures for any proposed design change/deviation to contract specifications.

The Contractor must complete Part 1 to 12B the Design Change/Deviation form DND 675 and forward one (1) to the Technical Authority and one (1) copy to the Contracting Authority.

The Contractor will be authorized to proceed upon receipt of the design change/deviation form signed by the Contracting Authority. A contract amendment will be issued to incorporate the design change/deviation in the Contract.

6.15 Plant Closing
The Contractor's plant closing for Christmas and Summer holidays are as follows. During this time there will be no shipments.

2017-2018
Summer Holiday FROM _____ TO _____
Christmas Holiday FROM _____ TO _____

2018-2019
Summer Holiday FROM _____ TO _____
Christmas Holiday FROM _____ TO _____

2019-2020
Summer Holiday FROM _____ TO _____
Christmas Holiday FROM _____ TO _____

6.16 Plant Location
Items will be manufactured at: _____

6.17 Subcontractor(s)
The following subcontractor(s) will be utilized in the performance of the contract.

Name of Company: _____
Location:_____
Value of subcontract: $_____
Nature of subcontracting work performed: _____

Subcontractors, other than those listed above, may not be utilized without the written permission of Canada.

6.18 Overshipment

Overshipment will not be accepted unless prior approval is obtained from the Contracting Authority.

6.19 Pre-Production Samples

The Contractor must provide pre-production samples as detailed in Annex B, herein.

CERTIFICATE OF COMPLIANCE - DEFINITION

A Certificate of Compliance is a written statement from an appropriate official of the component manufacturer attesting the full compliance of the component(s) to the specification. This document must be on official company stationery; it must be dated within six (6) months of the Request for Proposal posting date; it must make reference to the applicable specification and have the original signature of the company's designated representative. Canada reserves the right to verify the statements made in the Certificate of Compliance. Full test results, demonstrating the product's compliance, will be accepted in lieu of a Certificate of Compliance.

LABORATORY ANALYSIS - DEFINITION

Laboratory analysis of the product offered showing complete test results for specific tests listed hereunder of physical properties detailed in the technical requirement must be provided with the pre-production samples. Testing must be performed by an independent accredited laboratory establishment and must be in accordance with the test methods detailed in the technical requirement. The laboratory report and test results must be dated after request for proposal posting date.

6.20 Specifications and Standards

6.20.1 United States Military Specifications and Standards

The Contractor is responsible for obtaining copies of all United States (US) military specifications and standards which may be applicable to the requirement. These specifications and standards are available commercially, or may be obtained by visiting the US Department of Defense Website, at the following address: **http://assistdocs.com/search/search_basic.cfm**

6.20.2 Canadian General Standards Board (CGSB) - Standards

A copy of the CGSB Standards referred to in the Contract is available and may be purchased from:

Canadian General Standards Board
Place du Portage III, 6B1
11 Laurier Street
Gatineau, Québec
Telephone: (819) 956-0425 or 1-800-665-CGSB (Canada only)
Fax: (819) 956-5740
E-mail: ncr.cgsb-ongc@pwgsc-tpsgc.gc.ca
CGSB Website: http://www.tpsgc-pwgsc.gc.ca/ongc-cgsb/index-eng.html

6.21 Financial Security

1. Canada may convert the security deposit to the use of Canada if any circumstance exists which would entitle Canada to terminate the Contract for default, but any such conversion will not constitute termination of the Contract.

2. Where Canada so converts the security deposit:

   (a) the proceeds will be used by Canada to complete the Work according to the conditions of the Contract, to the nearest extent that it is feasible to do so and any balance left will be returned to the Contractor on completion of the warranty period; and

   (b) if Canada enters into a Contract to have the Work completed, the Contractor will:
      (i) be considered to have irrevocably abandoned the Work; and
      (ii) remain liable for the excess cost of completing the Work if the amount of the security deposit is not sufficient for such purpose. "Excess cost" means any amount over and above the amount of the Contract Price remaining unpaid together with the amount of the security deposit.

3. If Canada does not convert the security deposit to the use of Canada before completion of the contract period, Canada will return the security deposit to the Contractor within a reasonable time after such date.
4. If Canada converts the security deposit for reasons other than bankruptcy, the financial security must be reestablished to the level of the amount stated above so that this amount is continued and available until completion of the contract period.

APPENDIX “1” to PART 3 OF THE BID SOLICITATION

ELECTRONIC PAYMENT INSTRUMENTS

The Bidder accepts any of the following Electronic Payment Instrument(s):

( ) VISA Acquisition Card;

( ) MasterCard Acquisition Card;

( ) Direct Deposit (Domestic and International);

( ) Electronic Data Interchange (EDI);

( ) Wire Transfer (International Only);

( ) Large Value Transfer System (LVTS) (Over $25M)

ANNEX «A»
REQUIREMENT

A.1 TECHNICAL REQUIREMENT

The Contractor is required to provide Canada for the Department of National Defence (DND) Sniper Body Armour Systems in accordance with Annex B - Statement of Work and the Purchase Descriptions at Annex C-1, C-2 and C-3, attached herein.

A.2 ADDRESSES

Destination Address	Invoicing Address
WB941 Department of National Defence 25 CFSD Montreal 6363 Notre Dame St. E. Montreal, Quebec H1N 1V9	**W1941** Department of National Defence CFSD Montreal P.O. Box 4000 Stn K Montreal, Quebec H1N 3R9 Attention: Accounts payable

A.3 DELIVERABLES

A.3.1 FIRM DELIVERABLES

Item	Description	Firm Quantity	Unit of Issue	Firm Unit Price, DDP, Transportation costs included, Applicable taxes extra
01	**Sniper Body Armour System** (inclusive of all related components)	**319**	**Each**	**$_____**

SIZE ROLL

Size	Firm Quantity
XS-Short	**3**
XS-Regular	**20**
XS-Tall	**3**
S-Short	**20**
S-Regular	**93**
S-Tall	**20**
M-Short	**17**
M-Regular	**77**
M-Tall	**17**
L-Short	**6**
L-Regular	**23**
L-Tall	**6**
XL-Short	**3**
XL-Regular	**8**
XL-Tall	**3**
TOTAL	**319**

A.4 OPTIONS

Item	Description	Estimated Quantity	Unit of Issue	Firm Unit Price, DDP, Transportation costs included, Applicable taxes extra		
				Year 1	Year 2	Year 3
02	**External Carrier Rear**	140	Each	$_____	$_____	$_____
03	**Ballistic Panel Rear**	140	Each	$_____	$_____	$_____
04	**External Carrier Front**	140	Each	$_____	$_____	$_____
05	**Ballistic Panel Front**	140	Each	$_____	$_____	$_____
06	**Plate Carrier Rear**	140	Each	$_____	$_____	$_____
07	**Plate Carrier Front**	140	Each	$_____	$_____	$_____
08a	**Sniper Body Armour System** (inclusive of all related components)	240	Each	$_____	$_____	$_____

The Contractor grants to Canada the irrevocable option to acquire the goods described under items 02 to 08a inclusively and under the same terms and conditions and at the prices stated in the Contract.

The minimum quantity required when exercising the option to purchase additional quantities of each item is 25 units.

The maximum value for all amendments combined must not exceed $ (*to be advised at contract award*) excluding applicable taxes.

Options will be evidenced through a contract amendment which may only be exercised by the Contracting Authority within 36 months after contract award date by sending a written notice to the Contractor.

Multiple amendments may result. A size roll will be provided if and when the option is exercised.

Delivery times of the option quantities will be negotiated at the time that the option is exercised.

NOTE:

IF THE OPTION IS EXERCISED:	THE CONTRACTOR MUST USE PRICES FOR:
• Within 12 months from contract award date	Year 1
• Between 13 to 24 months from contract award date	Year 2
• Between 25 to 36 months from contract award date	Year 3

ANNEX B

Statement of Work (SOW)

SNIPER BODY ARMOUR SYSTEM

Contract Number: W8486-165488

Prepared by:
DSSPM
Technical Authority/Life Cycle Material Manager
National Defence Headquarters
Major General George R. Pearkes Building
Ottawa, Ontario
K1A 0K2

NOTICE
This documentation has been reviewed by the Technical Authority and does not contain controlled goods.

AVIS
Cette documentation a été révisée par l'Autorité technique et ne contient pas de marchandises contrôlées.

1 SCOPE

1.1 Purpose

The purpose of this Statement of Work (SOW) is to describe the tasks and deliverables required of the Contractor by Canada in order to define, manufacture, test, and deliver the Sniper Body Armour System (SBAS).

1.2 Background

The sniper community currently has access to the in-service Fragmentation Protective Vest (FPV) that is worn by all Canadian Forces (CF) members. The in-service FPV is an all-in-one system, meaning the soft armour and in-service Bullet Resistant Plate (BRP) pockets are part of one garment. While the in-service FPV provides excellent ballistic protection, it hinders the snipers ability to operate effectively due to its bulk and restricted range of motion. Therefore it was determined that snipers require a less restrictive garment that allows flexibility of protection and movement based on operational needs.

The SBAS to be delivered under this contract is composed of three components (refer to figure 1). The first component is the SBAS External Carrier (SBAS EC) that will hold the SBAS Ballistic Panel (SBAS BP). The second component is the SBAS Plate Carrier (SBAS PC) that will hold the in-service BRP. The third component is the Bilingual User Instructions Card that provides important information related to sizing and wearing/caring for the SBAS.

The SBAS will provide ballistic protection to members of the sniper community with improved flexibility of movement and protection options. The sniper will wear individual components or both to maximize ballistic and fragmentation protection.

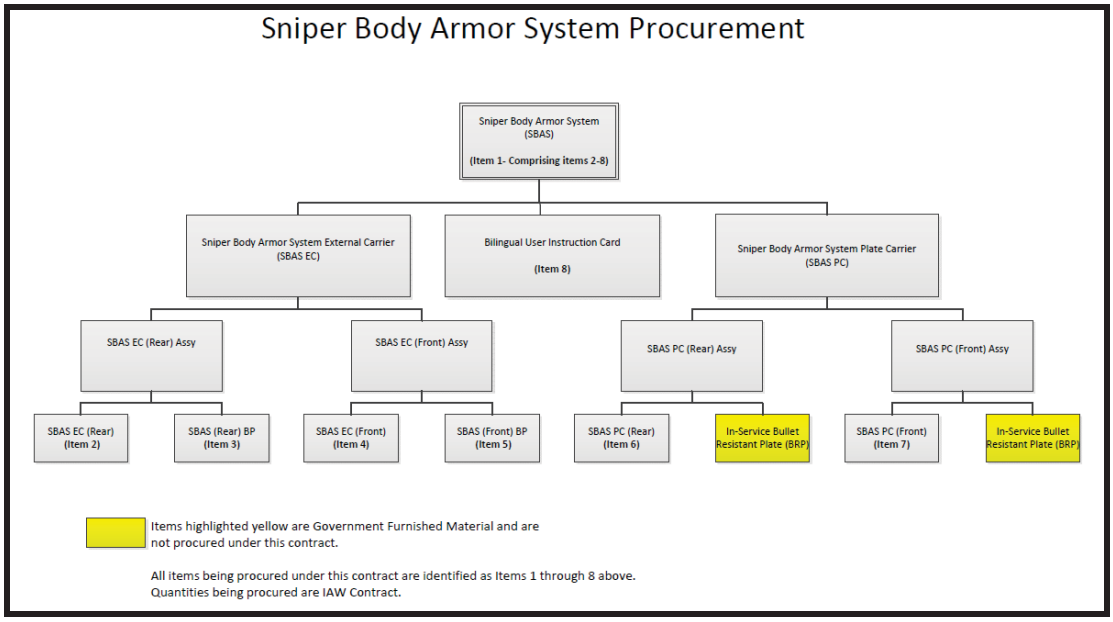

Figure 1: SBAS Procurable Items Hierarchy

1.3 Terminology

1.3.1 Definitions

1.3.1.1 BRP

This acronym is used as the abbreviation for the Bullet Resistant Plate, the in-service 10”x12” plate, NSN 8470-20-008-0980, used by Canada to provide bullet protection to the front and rear of the soldier’s torso.

1.3.1.2 DSSPM

This acronym is used as the abbreviation for the Directorate Soldier Systems Program Management. The Canadianv Technical Authority (TA) is found in this Directorate.

1.3.1.3 Pouch Attachment Ladder System (PALS)

The PALS is a grid of webbing equipment used to attach smaller equipment onto load-bearing platforms, such as vests and backpacks. The PALS grid consists of horizontal rows of 1 in (2.5 cm) nylon webbing, spaced 1 in apart, and reattached to the backing at 1.5 in (3.8 cm) intervals.

1.3.1.4 Range of Motion

Range of Motion refers to a person’s measured ability to move a body part through a sequence of movements.

1.3.1.5 **SBAS**

This acronym is used as the abbreviation for Sniper Body Armour System. A two component system to provide ballistic protection against bullets and fragmentation for personnel engaged in sniper activities. It consists of the SBAS EC that houses the SBAS BP and the SBAS PC that houses the BRP.

1.3.1.6 **SBAS EC**

This acronym is used as the abbreviation for the Sniper Body Armour System External Carrier. The SBAS EC consists of a front and rear carrier.

1.3.1.7 **SBAS BP**

This acronym is used as the abbreviation for the Sniper Body Armour System Ballistic Panel. The SBAS BP is inserted into both the front and rear external carriers.

1.3.1.8 **SBAS PC**

This acronym is used as the abbreviation for the Sniper Body Armour System Plate Carrier. The SBAS PC consists of a front and rear plate carrier. The BRP is inserted into both the front and rear plate carriers.

1.3.2 **Acronyms**

Acronyms	Description
AAMA	American Apparel Manufacturers Association
BRP	Bullet Resistant Plate
CA	Contracting Authority
CF	Canadian Forces
CGCS	Canadian Government Cataloguing System
DSSPM	Directorate Soldier Systems Program Management
FPV	Fragmentation Protective Vest
IAW	In Accordance With
PALS	Pouch Attachment Ladder System
PRM	Progress Review Meeting
QA	Quality Assurance
ROM	Range of Motion
SBAS	Sniper Body Armour System
SBAS BP	SBAS Ballistic Panel
SBAS EC	SBAS External Carrier
SOW	Statement of Work

Acronyms	Description
TA	Technical Authority

Table 1: Acronyms

2 Applicable Documents

2.1 Applicability

The documents listed in section 2 apply to and form part of this SOW. The Contractor is responsible for ensuring that it has obtained the most current version of the document. The version of the below identified document that is in effect at the time of bid closing date applies to and forms part of the Contract. All other document references contained elsewhere in this SOW are to be considered supplemental information only. The Contractor must bring to the attention of the Contracting Authority (CA) all perceived inconsistencies between the SOW and included or referenced documents in the Annexes or this SOW. In the event of conflict between the content of this SOW and the referenced documents, the content of this SOW must prevail.

2.2 Commercial Standards

2.2.1 A-A-55126 Fastener Tapes, Hook and Loop, Synthetic.

2.2.2 ASTM D123 Standard Terminology Relating to Textiles.

2.2.3 ASTM D1776 Practice for Conditioning Textiles for Testing.

2.2.4 ASTM D1777 Standard Test Method for Thickness of Textile Materials.

2.2.5 ASTM D3776 Standard Test Methods for Mass Per Unit Area (Weight) of Fabric.

2.2.6 ASTM D4032 Standard Test Method for Stiffness of Fabric by the Circular Bend Procedure.

2.2.7 ASTM E6 Practices for Force Verification of Testing Machines.

2.2.8 CAN/CGSB-86.1-M91 Care Labelling of Textiles.

2.2.9 MIL-DTL 32439 Cloth, Duck, Textured Nylon.

2.2.10 Mil-W-17337 Webbing, Textile, Woven Nylon

2.3 Canadian Military Standards

2.3.1 D-80-001-055/SF-001 Label, Clothing and Equipment.

2.3.2 D-LM-008-036/SF-000 Department of National Defence Minimum Requirements For Manufacturer's Standard Pack.

2.4 Engineering Drawings

2.4.1 Drawing Number 0078819 Plate Bullet Resistant, Control Drawing

3 Contractor Responsibilities and Overview

The Contractor is responsible for the management and delivery of all Contract deliverables in accordance with this SOW as follows:

3.1 The Contractor must perform all the work required to deliver the SBAS in accordance with this SOW and the Technical Purchase Descriptions described in Annex C-1 Purchase Description Ballistic Plates, Annex C-2 Purchase Description External Carrier and Annex C-3 Purchase Description Plate Carrier.

3.2 The Contractor must deliver the SBAS and sub-components, in the quantities and sizes specified in the contract, inclusive of associated deliverable, administrative, technical, and logistics support items outlined within this SOW.

4 Progress Review Meetings (PRMs)

4.1 Meetings

The Contractor must schedule, plan and organize a contract award, production readiness review and contract closure meeting at the Contractor facility.

If additional meetings are deemed appropriate they will be scheduled by the Contractor via teleconference or a web based location such as GoToMeeting (http://www.gotomeeting.ca) where documents can be simultaneously reviewed.

4.2 Agenda and Minutes of Reviews

The Contractor must produce and distribute agendas and minutes for all meetings. Agendas must be provided 5 working days prior to the scheduled meeting and minutes must be provided within 7 working days following the meeting.

5 Quality Assurance/Management Plan

The Contractor must submit a comprehensive QA/Management Plan that details all the QA processes that will be followed for the SBAS procurement.

The QA/Management Plan must address the following topics:

5.1 Design Processes;

5.2 Lot Control and Traceability Processes;

5.3 Testing Programs (must indicate laboratory/facilities used);

5.4 Production Control Processes;

5.5 Inspection Processes (including raw material, in process and post manufacturing);

5.6 Purchasing (must indicate suppliers);

5.7 Training Processes;

5.8 Project Management Processes (must name Project Manager); and

5.9 Contract Schedule.

6 Test Records and Data

Routine test data and inspection records must be maintained by the Contractor through production IAW his QA/Management Plan. These documents must be made available to the TA and DND Quality Assurance Representative on request.

7 Pattern Package Delivery

The Contractor must provide top level patterns for each deliverable end item being procured (All items in Table 3 and Items 2-7 from Table 4). The patterns will be used by the TA to facilitate cataloguing of the item in the Canadian Government Cataloguing System (CGCS). All patterns must be provided to the TA at the production readiness review meeting.

8 Bilingual (English and French) User Instruction Card

The Contractor must produce and deliver a Bilingual (English and French) User Instruction Card, shown as Item 8 in Figure 1, with each SBAS. A draft Bilingual (English and French) User Instruction Card is to be provided with pre-production deliverables per Annex B section 9.1. The TA will provide feedback within 7 working days on the draft Bilingual (English and French) User Instruction Card and the Contractor must incorporate all the recommended changes into the final Bilingual (English and French) User Instruction Card delivered in each SBAS.

Bilingual (English and French) User Instructions Card must contain the following information:

8.1 How to properly size SBAS and Sizing Chart;

8.2 Donning and doffing and adjustment of SBAS components;

8.3 Removal and insertion of SBAS BP into SBAS EC;

8.4 Insertion and removal of the in-service BRP into SBAS PC;

8.5 Cleaning and maintenance instructions for all components that make up the SBAS.

9 Deliverables

9.1 Pre-Production Deliverables

Before the Contractor can start production of the SBAS they must successfully submit items for pre-production evaluation by the TA. On successful completion of the technical inspection the Contractor will receive authorization to commence full production. The technical inspection will be performed at the Contractor facility as part of the production readiness review meeting. The items that must be available for inspection at the production readiness review meeting are detailed in Table 2.

100% of the pre-production samples must pass TA technical inspection. If an item fails inspection the Contractor will be given 15 working days to resubmit a new pre-production sample(s) that incorporates improvements to address all TA observations.

Pre-Production Deliverables	Quantity
SBAS in a Large Regular Size	1
SBAS in a X-Small Regular Size	1
Draft Bilingual (English and French) User Instruction Card per Annex B section 8	1
A copy of the paper patterns for medium regular, graded nests of all sizes, Grade Rule Tables and an electronic copy of all sizes of the vest as a Gerber Accumark Model, or, DXF-AAMA format.	1

Table 2: Pre-Production Deliverables

Items are to be delivered to the following address 14 days before the scheduled production readiness review meeting: 101 Colonel By Drive
Ottawa, ON
K1A 0K2
Attention: DSSPM

9.2 Production Deliverables

The Contractor must deliver SBAS quantities IAW the contract in the sizes detailed in Table 3.

Serial	Size
1	X-Small Short
2	X-Small Regular
3	X-Small Tall
4	Small Short
5	Small Regular
6	Small Tall
7	Medium Short
8	Medium Regular
9	Medium Tall
10	Large Short
11	Large Regular
12	Large Tall
13	X-large Short
14	X-large Regular
15	X-large Tall

Table 3: SBAS Delivery Requirement

9.3 Option Deliverables

Canada reserves the right to procure additional quantities of the below items IAW the contract.

Serial	Description	Procurable Item Number (Fig. 1 refers)
1	SBAS	1 (includes items 2-8)
2	SBAS EC (Rear)	2
3	SBAS BP (Rear)	3
4	SBAS EC (Front)	4
5	SBAS BP (Front)	5
6	SBAS PC (Front)	6
7	SBAS PC (Rear)	7

Table 4: Option Deliverables

9.4 Deliverable Destination

Delivery for end items contained in Table 3 and 4 are to be made to IAW the contract.

ANNEX C-1

TECHNICAL PURCHASE DESCRIPTION

SNIPER BODY ARMOUR SYSTEM

BALLISTIC PANEL

Contract Number: W8486-165488

Prepared by:
DSSPM
Technical Authority/Life Cycle Material Manager
National Defence Headquarters
Major General George R. Pearkes Building
Ottawa, Ontario
K1A 0K2

NOTICE

This documentation has been reviewed by the technical authority and does not contain controlled goods. Disclosure notices and handling instructions originally received with the document shall continue to apply.

1 SCOPE AND CLASSIFICATION

1.1 Scope

This document details the technical and performance requirements for the Sniper Body Armor System Ballistic Plates that are sub-components of the SBAS External Carrier (SBAS EC).

The SBAS BP's are soft armour panels that are inserted into the SBAS EC (Rear) and SBAS EC (Front) components to make the SBAS EC (Rear) and SBAS EC (Front) assemblies.

Together these two assemblies make up the SBAS EC. The SBAS BP's are shown as items 3 and 5 in Fig.1.

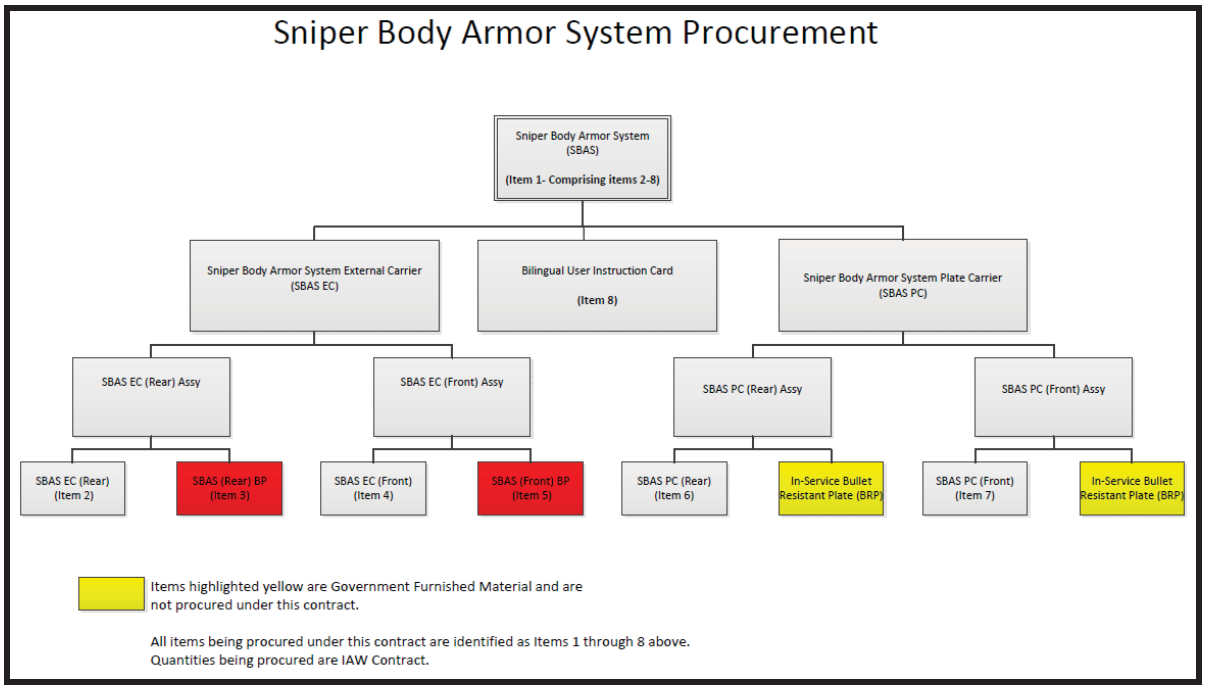

Figure 1: SBAS Procurable Items Hierarchy

1.2 Intended Use

The SBAS provides protection on a 24 hour, global, all-weather continuum to the extent practical. The SBAS provides ballistic protection from fragmenting munitions and debris resulting from high explosive detonation and other explosive devices. Combined with the Bullet Resistant Plates (BRP), this system will optimise the protection levels to defeat multiple ballistic hazards across the battlefield continuum. The SBAS is

designed as a two component system composed of an SBAS EC with soft ballistic panels that is worn over the combat shirt and a SBAS PC that can be worn stand alone or over the SBAS EC.

1.3 System Requirements

The SBAS BP forms a component of the Sniper Body Armour System and the SBAS BP flexible armour panels are removable and consist of the front and rear specific panels.

1.4 Terminology

1.4.1 Definitions

Ballistic definitions must apply only to those sections related to spall resistance and ballistic penetration performance of the ballistic fill arrangement found in the various ballistic panels for the SBAS BP and the ballistic shoot-packs for testing. Definitions are listed alphabetically.

1.4.1.1 Accepted Hit (Valid of Impact)

Accepted impacts include all fair hits; also includes any unfair hit for which the test conditions are more severe than specified (velocity too high and/or hit separation distance too short), but the performance criteria are met. It also includes any unfair hit for which the test conditions are less severe (velocity too low or impact or yaw angle too high), and the performance criteria are not met, this will then constitute a failure.

1.4.1.2 Angle of Impact

The angle in degrees between the line of flight of the projectile and the perpendicular to the plane tangent to the point of impact on the target sample (refer to Fig. 2). In some documents, angle of obliquity is used with the same meaning.

1.4.1.3 Area of Coverage

The area in square meters (m^2) of the flexible ballistic insert used in a SBAS BP; also area of a ballistic shoot-pack used for ballistic testing.

1.4.1.4 Areal Density

Is a measure of the weight of armor material per unit area usually expressed in kilograms per square meter (kg/m^2) of surface area.

1.4.1.5 Backface

The surface of a test specimen positioned next to the body; also referred to as the wear face.

1.4.1.6 **Backface Deformation**

Is the maximum transient displacement of the back surface of a test sample, caused by a non-perforating projectile impact. This corresponds to the maximum depth of the depression made in the backing material measured from the undistorted front surface of this material.

1.4.1.7 **Backing Material**

A block of tissue-simulating material placed next to the back face of the test sample used to support the sample during testing. Oil-based non-hardening modelling clay is used to capture the indentation resulting from the impact during backface deformation testing (VProof). For the V_{50} tests, no backing material is used.

1.4.1.8 **Ballistic Ply**

Is a flexible armour material layer contained in the proposed ballistic solution prior to assembly into a panel.

1.4.1.9 **Ballistic Panels**

The finished ballistic production component, comprising the final construction of the ballistic panel, assembled and sealed in their protective cover. All ballistic panels are modular and removable from their corresponding carrier shell components.

1.4.1.10 **Ballistic Shoot-Pack**

A 400 x 400 mm test specimen used for destructive testing. It is fully representative of the production panel solution, but used only for ballistic validation. Ballistic shoot-packs must be assembled and corner stitched (or replicate stitching if a quilted solution is proposed) to replicate the ballistic panels without protective cover. Traceability must be maintained in accordance with (IAW) section 5.6.

1.4.1.11 **Armour Material-Pack**

A 152 x 152 mm test specimen used only for non-destructive testing and physical measurements. Material packs must be assembled in the final design construction, but not stitched, unless a quilted solution is proposed. If a quilted solution is provided, then four (4) additional ballistic shoot-packs (400x400 mm) must be delivered in lieu of material-packs. From these samples will be cut into necessary test coupons. Traceability must be maintained IAW section 5.6.

1.4.1.12 **Ballistic Resistance**

A measure of the capability of a protective material to stop or reduce the impact velocity of a striking projectile; in this document ballistic resistance is measured using ballistic limit tests (V_{50}) and a backface deformation resistance test (VProof).

1.4.1.13 **Ballistic Retardation (R)**

Is a measure of the average attenuation of velocity or air drag deceleration of a projectile per unit distance (m/s/m) from the launcher up to the test sample.

1.4.1.14 **Complete Penetration (CP)**

A complete penetration has occurred when the projectile, or a piece of the projectile or any part of the ballistic protective material has passed completely through the test sample and is captured by or has passed through the backing material for the VProof test, or has passed through the witness paper for the V_{50} test (crack or hole permitting light passage). If the projectile remains lodged in the test sample and part of it is visible from the back face of the sample this will also be considered as a complete penetration for the VProof test.

1.4.1.15 **Fair Hit**

A zero degree obliquity (±x degrees) impact using the specified weight and type of un-yawed projectile (x=3 degrees maximum for 9 mm bullet and 5 degrees for RCC and FSP) within the specified velocity range and at the specified location on the target sample.

1.4.1.16 **Fragment Simulator**

A generic projectile type used in ballistic testing. Fragment simulators have various geometric and physical characteristics that simulate the terminal effects of fragmenting munitions.

1.4.1.17 **Fragment Simulating Projectile (FSP)**

A specific fragment simulator based on a standardised cylindrical projectile with a chisel nose (refer to Fig. 6).

1.4.1.18 **Highest Partial Penetration (HPP)**

Is the velocity where highest partial penetration occurs.

1.4.1.19 **Indentation Diameter or Size**

The indentation diameter of the depression made in the backing material measured from the undistorted front surface (refer to Fig. 3). For non-symmetric cavity, both the smallest diameter (width) and the largest diameter (length) must be measured and recorded.

1.4.1.20 **Measured Velocity (Vm)**

The velocity measured, at a given distance in front of the ballistic shoot-pack (refer to Fig. 4), by an approved device providing the required accuracy. When using a pair of detectors, measure to the middle of the two detectors.

1.4.1.21 **Lowest Complete Penetration (LCP)**

Is the lowest velocity where complete penetration occurs.

1.4.1.22 **Partial Penetration (PP)**

Any fair shot that is not identified as a complete penetration using the definition above, is to be recorded as a partial penetration; that is, the projectile rebounded, or remained embedded in the test sample without causing perforation of or imprint on the witness sheet or backing material.

1.4.1.23 **Rejected Hit (Invalid Impact)**

Impacts are rejected and must be repeated if they are unfair and do not meet the special exceptions for accepted hits; a fair hit can also be rejected if it resulted in a test specimen not meeting the pass criteria and it came after an unfair but accepted hit having more severe test conditions.

1.4.1.24 **Residual Velocity (Vr)**

Is the velocity of the projectile after impacting and exiting the armour material (complete penetration impacts).

1.4.1.25 **Right Circular Cylinder (RCC)**

A standardised cylindrical fragment simulator with a flat nose and sharp edges (refer to Fig. 5)

1.4.1.26 **Sabot**

A plastic carrier (refer to Fig. 7) in which a projectile is centred to permit firing in a larger calibre barrel. The sabot is usually discarded in flight a short distance from the launcher, and only the sub-calibre projectile continues to the target.

1.4.1.27 **Separation Distance**

Is the distance between the centres of any two hits or the centre of any one hit and the edge of the armour sample or the target retaining fixture.

1.4.1.28 **Stand-off Distance**

Is the distance between the backface of the armour material and the witness sheet.

1.4.1.29 **Strike Face**

Is the surface of a test specimen that faces the attack of the ballistic threat.

1.4.1.30 **Striking Velocity (V_s)**

Is the velocity of the projectile when impacting the test sample as measured 1.5 m in front of the target.

1.4.1.31 **Test Range**

Is the distance between the muzzle of the test barrel and the strike face of the target sample (refer to Fig. 4).

1.4.1.32 **Twist Length**

Is the horizontal distance along the gun barrel where the rifling makes one complete turn; not to be confused with the actual length of the rifling over the complete barrel length.

1.4.1.33 **Unfair Hit**

A shot that does not conform to the criteria specified (see Table 1), that is, the yaw and obliquity exceeds the requirements or the velocity is above or below that specified for the projectile or the shot does not respect the shot pattern and sequence, i.e., too close to the edge of the specimen or to another shot. For the backface deformation test (VProof), impact where the velocity is outside the range specified.

1.4.1.34 **V_{50} Ballistic Limit**

The striking velocity where 50 % of the impacts of a particular projectile are expected to result in complete penetrations of a target sample of a given number of plies and physical properties at a specified angle of impact in a limited statistical test. The method involves obtaining at least 14 shots using the modified up-and-down firing technique. The V_{50} is computed using the maximum likelihood method (DRDC Probit as per EXCEL file available from DRDC-Valcartier). Used as a quantitative measure of armour capability.

1.4.1.35 **MV_{50}**

Average of the individual V_{50}'s for a specified threat having a spread of less than 30 m/s; if not, extra samples will need to be tested until the required number are found falling within the spread (refer to Tables 4-1, 4-2 and 5).

1.4.1.36 **$MV_{50}qc$**

Minimum average value (MV_{50}) of a production material lot and is used for quality control. It must be greater than or equal to 97% of $V_{50}ca$.

1.4.1.37 **$V_{50}ca$**

The MV_{50} established during a bid evaluation for each specified threat.

1.4.1.38 **VProof**

Is the minimum velocity specified for a particular projectile for a pass/fail test such as the backface deformation resistance test where a given number of rounds are fired at a test specimen and where no complete penetration is allowed.

1.4.1.39 **Velocity Spread**

Is the spread between the highest velocity and the lowest velocity of a group comprising an equal number of partial and complete penetrations.

1.4.1.40 **Witness Paper**

A 0.38-mm thick Hilroy poster board sheet no 20210 (270 g/m^2) placed 150±2 mm behind and parallel to the target surface at the impact point used to qualify the perforation result.

1.4.1.41 **Yaw**

The angle between the main axis of the projectile and its trajectory (velocity vector - refer to Fig. 2). It should be measured as close to the target as possible. Projectile yaw at impact can noticeably alter the extent of penetration. Projectiles having a discarding sabot are more susceptible to yaw.

1.4.1.42 **Yaw Card**

A stiff paper-type material placed in the projectile's line of flight, and used to determine the projectile yaw. The yaw card can also be used to find the exact hit location of the projectile after firing in order to assess hit fairness.

1.4.1.43 **Zone of Mixed Results (ZMR)**

The difference in velocities between the highest partial penetration and the lowest complete penetration actually obtained during a V_{50} test (HPP-LCP).

1.4.2 **Acronyms**

Acronym	Description
AD	Areal Density (kg/m$^{2)}$
ASTM	American Society of the International Association for Testing and Materials
BRP	Bullet Resistant Plate
BRP	Bullet Resistant Plate
C_D	Drag Coefficient for the projectile
CA	Contracting Authority
CP	Complete Penetration
D	Diameter of Sphere (m)
DRDC	Defence Research and Development Canada
DREV	Defence Research Establishment Valcartier
FSP	Fragment Simulating Projectile
HPP	Highest Partial Penetration
IAW	In Accordance With
kg/m^2	Kilograms per meters squared
LCP	Lowest Complete Penetration
m	Mass of projectile (kgs)
M	Mach Number
MV_{50}	Average of V_{50}
PP	Partial Penetration
PSPC	Public Services and Procurement Canada
R	Ballistic Retardation
R	ballistic retardation
ρ	air density (1.225 kg/m$^{3)}$
RCC	Right Circular Cylinder
RH	Relative Humidity
SBAS	Sniper Body Armour System
SBAS BP	SBAS Ballistic Panel
SBAS EC	SBAS External Carrier
TA	Technical Authority
V_{50}	V_{50} Ballistic Limit
V_{50}ca	V_{50} Established at Contract Award
Vi	Intended Velocity
Vm	Measured Velocity (m/s)
Vr	Residual Velocity (m/s)
V_s	Striking Velocity or Velocity at Target (m/s)

Acronym	Description
X	Distance between measuring point and target in meters
ZMR	Zone of Mixed Results

2 APPLICABLE DOCUMENTS

2.1 Applicability

The documents listed in section 2 are mandatory, and apply to and form part of this Technical Purchase Description. The Contractor is responsible for ensuring that it has obtained the most current version of each document. The version of the below identified document in effect at the time of Contract execution applies to and forms part of the Technical Purchase Description. All other document references contained elsewhere are to be considered supplemental information only. The Contractor must bring to the attention of the Contracting Authority (CA) all perceived inconsistencies between the Technical Purchase Description and referenced documents. In the event of conflict between the content of this Technical Purchase Description and the referenced documents, the content of this Technical Purchase Description must prevail.

2.2 Commercial Standards

2.2.1 ASTM D123 Standard Terminology Relating to Textiles.

2.2.2 ASTM D1776 Practice for Conditioning Textiles for Testing.

2.2.3 ASTM D1777 Standard Test Method for Thickness of Textile Materials.

2.2.4 ASTM D3776 Standard Test Methods for Mass Per Unit Area (Weight) of Fabric.

2.2.5 ASTM D4032 Standard Test Method for Stiffness of Fabric by the Circular Bend Procedure.

2.2.6 ASTM E6 Practices for Force Verification of Testing Machines.

3 Armour Characteristics.

3.1 Armour Materials

Flexible armour materials used for the ballistic panels must be made of durable quality materials with characteristics that must not undergo appreciable degradation under the influence of ageing or from exposure to the environmental conditions in which the SBAS BP is to be worn (see section 1.2). Ballistic panels must be encapsulated in sonic sealed, waterproof, nylon covers. The armour material is to be free from all imperfections that may affect quality or serviceability of the finished product. 2” x 2” adhesive hook or loop fastener (the opposite of what is use in the External Carrier per in

Annex C-2 3.2.3.2.4) must be applied to the shoulder area of the ballistic panel to engage the external carrier.

3.1.1 **Labels**

3.1.1.1 Four types of permanent marking must apply to the ballistic panels:

3.1.1.1.1 Safety Label or Markings;

3.1.1.1.2 Traceability Markings;

3.1.1.1.3 Identification Labelling; and

3.1.1.1.4 Instruction Labelling.

3.1.2 **Safety Label or Markings**

The **strike face** of both front and rear ballistic panels must be clearly marked or labelled with the following (Fig 24 refers):

STRIKE FACE / FACE AVANT

3.1.3 **Traceability Markings**

The Contractor must provide a fail-safe system of identifying and linking ballistic panel lot numbers to ballistic material lots/sub-lots, key material finishing processes, and ballistic test records. Traceability markings must be as established by the Contractor.

3.1.4 **Identification Labelling**

The Identification Label for the ballistic panels (front/rear) must be IAW Figures 22. The character size used in the identification labels must be readable and maximised to fit within the applicable label size. The identification "DND CANADA MND" should be approximately double the size of other fonts used in the label. Placement of labels is IAW figure 24.

3.1.5 **Instruction Labelling**

The Instruction Label for the ballistic panels (front/rear) must be IAW Figures 23. The character size used in the instruction labels must be readable and maximised to fit within the applicable label size. The character size used in the safety label must be a minimum of 1.5 cm high. Placement of labels must be IAW figure 24.

3.2 Ballistic Packs

Ballistic packs must include shoot-packs and armour material-packs that are provided for testing. The material used in the ballistic packs to evaluate performance characteristics must be fully representative of the production solution proposed. Each shoot-pack should be tacked in the four corners, unless the production solution includes a specific stitching pattern.

3.3 Hybrid Solutions

Non-symmetric hybrid armour materials (non-homogeneous construction) are allowed in the construction of the ballistic solution. The ballistic fill layering order and positioning of each ply in the panel must be defined for shoot-packs and for all component ballistic panels used in production with the strike face and alignment of the materials clearly indicated on each layer (ply) of material if its direction or positioning is performance sensitive. If more than one component material is used, then the following data for each different material must be provided: composition, layering order, and manufacturing details.

3.4 Ballistic Panel Areal Density (AD)

When measured IAW section 5.1, the maximum areal density of the armour material-packs and the ballistic panels must not exceed 3.25 kg/m^2 with a maximum variability of areal density between the test specimens less than 0.15 kg/m^2.

3.5 Ballistic Panel Thickness

The thickness of the armour material-packs and the production panels should not exceed 4 mm, but must not exceed 7 mm when tested IAW section 5.2.

3.6 Ballistic Panel Flexibility

The armour material should be as flexible as possible while meeting the ballistic requirements. The stiffness/flexibility of the armour material-packs must not be greater than 2.2 N/mm when tested IAW section 5.3.

3.7 Ballistic Panel Static Water Absorption

After static water immersion, the ballistic shoot-pack must not gain more than 20% in weight when tested IAW section 5.4.

4 Ballistic Qualification

Six tests are included for ballistic qualification of the SBAS BP armour solution. Five ballistic limit tests (V_{50}) using 4 projectile types (small and large sphere, RCC, and FSP); one proof velocity test (VProof) with a full metal jacket (FMJ) handgun bullet for backface deformation resistance. During production DND reserves the right to

complete any of these ballistic qualifications to confirm that the production solution being delivered meets the ballistic requirements of the contract. Testing will follow the methods described in this technical purchase description.

4.1 Ballistic Limit Resistance (Min V_{50})

The ballistic limit resistance (V_{50}) of the armour solution of the SBAS BP must meet the five ballistic limit test requirements as specified in Annex C-1 Tables 4-1 and 4-2. The average MV_{50} for each threat is calculated from the arithmetic mean of individual V_{50} values having a maximum velocity spread of 30 m/s. The V_{50} value for individual tests must not be less than minimums specified below. The ZMR for each V_{50} value must be less than 60 m/s, and the ZMR for each MV_{50} value must be less than 50 m/s.

4.2 The $\mathbf{V_{50}}$ using the 17-grain FSP (5.46 mm calibre) in the dry condition must be greater than 500 m/s.

4.3 The $\mathbf{V_{50}}$ using the 16-grain steel ball projectile (6.34 mm calibre) in the wet condition (30 minutes water immersion) must be greater than 415 m/s and in dry condition must be greater than 455 m/s.

4.4 The $\mathbf{V_{50}}$ using the 64-grain RCC (8.74 mm calibre) in the dry condition must be greater than 350 m/s.

4.5 The $\mathbf{V_{50}}$ using the 1-grain steel ball projectile (2.49 mm calibre) in the dry condition must be greater than 525 m/s.

4.6 Backface Deformation Resistance (VProof)

The average backface deformation of the SBAS BP ballistic fill supported on clay in the dry conditions should not be more than 44 mm when tested using a 124-grain FMJ bullet (9 mm calibre) impacting at an average velocity of 365 m/s. In addition, each single indentation in the clay material must not be more than 50 mm, and no complete penetration of the armour material must occur with the FMJ bullet.

5 Methods of Test

5.1 Ballistic Panel Areal Density (AD)

The materials in the armour material-packs and the production panels must be measured IAW ASTM D3776 (option A, or C) or equivalent and the average areal density calculated. Equipment used for measurement must be calibrated for accuracy and should be capable of weighing with a precision of ± 1 gram. The average value of the ten (10) armour material-pack measurements will be used for qualifying each material lot.

5.2 Ballistic Panel Thickness

The thickness of the armour material-packs and the production panels must be measured IAW ASTM D1777 (option 1) or equivalent. The average value of the ten (10) armour material-pack measurements and variance will be used for qualifying each material lot.

5.3 Ballistic Panel Flexibility

The armour material-packs flexibility must be measured using the modified circular bend test (developed by CMC/DREV) method as specified in Section 7. The average value of the ten (10) armour material-packs and variance will be recorded for information and monitored for significant deviation from the production average.

5.4 Water Absorption

The ballistic shoot-packs used in wet target tests must be measured as specified in section 6.6.5 and the percentage weight gain calculated. The average value of three contractor-measured samples and the three DND- measured samples will be used for pre-award qualification.

5.5 Ballistic Protection

Verification during production must be done using shoot-packs and material-packs constructed from each ballistic material lot/sub-lot prior to cutting into plies for production panels.

5.6 Ballistic Lot Traceability

Traceability of finished production panels/panels must be maintained in all cases to the original material lots. Ballistic material lots must not normally exceed 4000 m and must be based on a woven beam. Lots must be further broken down into finished sub-lots and rolls. A sub-lot (for test qualification) will be based on the finishing date or 1000 m whichever is smaller. Rolls must be strictly controlled by the prime contractor and his supplier and grouped by finish date and woven beam.

6 BALLISTIC TEST PROCEDURES

6.1 Scope

This section describes reproducible test procedures defined for the evaluation of ballistic shoot-packs and the qualification of ballistic fill solutions for use in the SBAS BP. These procedures will be used to confirm ballistic performance requirements. The following test methods are defined**:**

6.1.1 The Ballistic Limit V_{50} tests (large sphere, small sphere, RCC, and NATO FSP); and

6.1.2 The Backface Deformation VProof test (9 mm projectile)

6.2 Test Equipment

6.2.1 Projectiles

Details on the projectile types, calibre and the respective properties to be used for the ballistic tests specified herein are summarised in Table 1. Sources of acceptable projectiles for this purchase description are specified in the table. A precise description (mass, diameter, lot number) of all projectiles used must be included in test reports. Since the projectiles may be damaged during impact on the test specimen, they must be used only once.

6.2.2 Launching System

The launching device (launcher and propellant) must consist of a device capable of propelling reproducibly the specified projectiles at an acceptable impact angle and at the specified velocity range. It may be an actual powder rifle or a test barrel. Launching devices known to have velocity stability problems should not be used. The projectiles must be single launched to obtain the number of fair hits required on each sample. When a rifled barrel is used, the barrel twist length should be recorded and it must be as specified in Table 1. When the size of the launcher is larger than the calibre of the projectile or when high impact velocities are required, the projectile can be inserted into a split plastic sabot, e.g., a 6.34 mm sphere can be fired from a common 7.62 mm (.308 in) barrel. The preferred method to launch the 7.34 mm sphere is a smooth bore barrel chambered for .22 cal Ramset blank cartridge. The drawing of an acceptable sabot to launch the 2.5 mm sphere from a 5.56 mm barrel is depicted in Fig. 7. The launching device must also be held in such a manner that its alignment does not change upon firing. For the ballistic tests, the launching system (launcher and propellant) must be capable of launching the projectile at velocities up to 1000 m/s.

6.2.3 Launcher Calibration

To obtain the specified velocity for powder guns, hand loading of the ammunition is usually done. The muzzle velocity can also be set by adjusting the projectile seat in the barrel. A control of projectile velocity with a precision of ± 10 m/s of the desired velocity must be met for the V_{50} and VProof tests based on a series of 10 shots. A projectile velocity/propellant mass curve (or gas pressure curve) for the launcher system used must be determined before testing is performed. This curve is required to provide a basis for selecting the propellant charge to achieve a desired velocity. When firing with reduced charges, the yaw of the projectile may be greater than the yaw likely to be experienced with full charge firings.

6.2.4 Weapon Mounting

The test weapon must be firmly mounted 5 m (refer to Fig. 4) from the muzzle to the test sample and in such a manner that its alignment does not change upon firing. It

must be aimed to produce a zero degree obliquity to the sample at the impact location. When a new barrel is used, at least 25 shots should be fired to break in the barrel.

PROJECTILES	Small Sphere	Large Sphere	NATO FSP	RCC	9x19mm FMJ
Ballistic Test	Section 6.1 [6.1.1]	Section 6.1 [6.1.1]	Section 6.1 [6.1.1]	Section 6.1 [6.1.1]	Section 6.1 [6.1.2]
Projectile mass g ***(grain)***	0.064±0.002 *(1)*	1.042±0.03 *(16)*	1.12±0.03 *(17)*	4.15±0.02 *(64)*	8.03±0.13 *(124)*
Projectile Material	Chrome Alloy Steel	Chrome Alloy Steel	4340 Steel or Equivalent	4340 Steel or Equivalent	Copper Jacket Lead Core
Projectile Hardness	60-66 RC	60-66 RC	28-32 RC	28-32 RC	---
Acceptable Source	Ball Grade G20, G28 or G40 SKF, FAG or Equivalent	Ball Grade G20, SKF, FAG or Equivalent	Figure 6 or Equivalent	Figure 5 or Equivalent	Hornady #3557 or Equivalent
Projectile Diameter mm	2.49±0.01	6.34±0.01	5.46±0.02	8.74±0.02	9.02
Projectile Length mm	2.49±0.01	6.34±0.01	6.52 nominal	9.17 nominal	---
LAUNCHER					
Barrel twist length mm	406 Sabot Separation	Smooth Bore Barrel	Max 250	Max 406	Max 250

TABLE 1: Projectile and Launcher Summary

6.3 Witness Systems

6.3.1 Penetration Witness

The witness system for V_{50} Ballistic Limit tests consists of a nominal 0.38 mm thick Bristol paper placed at a 150 ± 2 mm stand-off distance behind and parallel to the target surface at the impact point (refer to Fig. 4). The witness system must extend over a sufficient area such that all projectiles with sufficient momentum can be detected. Perforation of the sheet will be considered as perforation (complete penetration) of the target material. Impacts that are not identified as perforations using this definition are to be recorded as non-perforations.

6.3.2 Back face Deformation Witness

A clay backing material must be used to measure the maximum backface deformation of the target sample regardless of the tendency of the ballistic material to recover to its original shape. The backing material that has been qualified by Canada is Roma Plastilina No. 1 modelling clay (oil-base, and non-hardening soft clay). It is available from Sculpture House, 38 East 30th St., New York, NY 10016, tel.: (718)-386-1354, Fax: (718)-386-3292 or from other artist supply centres. It must be calibrated to confirm that it is homogeneous and has the right consistency. If the calibration method

damages the backing material then the damaged area(s) must be avoided during the ballistic testing.

6.4 Sample Retention Method

6.4.1 Specimen Retention System (V_{50})

The ballistic shoot-pack must be clamped along its edge to a rigid support fixture (sandwich window frame) of such size that the unsupported impact area is 30 x 30 cm and that it remains firmly in place before, during and after projectile impact. The surrounding clamping fixture must have interlocking ribs to ensure minimal target slippage during testing. A typical target fixture is shown in Fig. 8. The target frame must be tightened such that the closing force is 30±3 kN. The test sample must lie smooth and flat and must only be slightly stretched between the two frames. The target centre deflection before firing must be such that when pushing the panel at the centre by a distance of 9 mm beyond the original front surface plan with a load cell having a cylindrical probe diameter of 12.5 ± 0.5 mm, the load registered must fall between 2 N and 30 N (refer to Fig. 14).

Fabric test specimens can be replaced to initial shape after every shot, if desired, but this is not required. The test sample may be readjusted between shots when excessive pulling from the retention fixture occurs so that the required deflection is maintained throughout the test sequence. Target restraint provides for more accurate, reproducible, and cost effective method of data acquisition.

The support fixture must be capable of vertical and horizontal adjustment to ensure that the impact points can be located anywhere on the strike face, and that the projectiles strike the target surface normal (zero deg impact angle) to the line of fire. The fixture must allow the conditioned sample to be quickly mounted or dismounted to minimise changes in conditioning temperature.

6.4.2 Specimen Retention System (Backface Deformation)

The ballistic shoot-pack must be mounted on a rigid metallic box of the following minimum internal dimensions (340 x 340 x 100 mm) filled with the clay backing material specified in section 6.3.2. The ballistic shoot-pack must be attached to the block of backing material by means of two elastic straps or by equivalent means to ensure a good contact between the specimen and the block. The distance between the two straps should be approximately 150 mm apart and the point of impact must be at an equal distance from the two straps so that there is no interference with the shot pattern. No individual shot must fall within 50 mm of either retaining strap. The block itself must be supported on a rigid fixture so that it remains firmly in place before, during and after projectile impact. The support fixture must be capable of adjusting the position of the block horizontally and vertically such that the prescribed shot pattern can be followed and so that zero degree obliquity can be achieved anywhere on the test specimen.

6.5 Measurements

6.5.1 Velocity Measurement

The velocity of the projectile before impact and after impact (if required) must be measured with a measurement system that can provide an accuracy of ±0.3% (e.g. a true velocity of 1000 m/s should be recorded within an accuracy of ±2 m/s). The measurement system used must be calibrated and certified for accuracy according to the manufacturer instructions. The calibration procedures and records must be kept and made available upon request. If accuracy is not certified, two independent measurement systems must be used. The difference between the two velocities measured with these two independent systems must be less than 0.5%. When chronographs are used they must have a precision of 1 μs.

The detectors can be photoelectric screens, conductive screens, laser ribbons, acoustic, inductance or capacitance type. Doppler radar systems are also appropriate. When detectors are used, they must be oriented perpendicular to the projectile trajectory. All distances must be kept constant for the whole duration of a test. The separation distance between the triggering planes of the detectors must be measured and recorded with an accuracy of 1 mm and maintained to a tolerance of ±1 mm. The position of the gun, the velocity detectors and the target must be kept constant for the duration of a test sequence.

Before commencing a test sequence, three pre-test rounds must be fired to verify that the required velocity for the test is obtained. If necessary additional rounds must be fired until a stable striking velocity is achieved.

Each impact velocity must be measured and recorded and if not within accuracy required, that impact must be disregarded. When two independent sets of instrumentation are used, velocities from each set will be recorded and the mean average of the two velocities must be calculated.

6.5.2 Yaw Measurement

The yaw angle of the projectile at impact may be measured by a method that is accurate to within ±0.5 degrees (e.g. yaw card, flash radiograph, photography) and does not in itself cause projectile instability. Yaw cards are simple and inexpensive and they should be used unless they prove unsatisfactory. Yaw cards are usually made using a stiff material from that the fragment will punch a clean hole showing its presented area at impact. Processed photographic paper, single weight, 200x200 mm in size, may be used for the yaw card. They should be placed perpendicular to the line of flight and positioned as near the target surface as possible (desirably within 150 mm from the shoot-pack).

When using FSP or RCC, the dimensions *D1*, *D2* and *L* (refer to Fig. 9) must be measured immediately prior to firing. Yaw is then computed by measuring, using an optical device with a magnification factor of at least 5X, the largest dimension (*A*) of the

hole caused during perforation of the witness plate. For fragment simulator having no rear skirt, *D1=D2*. The yaw angle (θ) is then determined using the following formulas:

$$DM = \frac{D1 + D2}{2}$$

$$T = \sqrt{L^2 + DM^2}$$

$$\theta = \alpha - \beta = \sin^{-1}(A/T) - \tan^{-1}(DM/L)$$

When the hole in the yaw card is a perfect circle there is no yaw. For FSP and RCC, the maximum acceptable yaw (θ) must not exceed 5°. Rounds that exceeds 5° must be rejected for excessive yaw, and a further round fired under the same test conditions. If three rounds out of five exhibit unacceptable yaw, the gun barrel should be replaced with a new one. In case of dispute, yaw must be measured using an orthogonal photographic or flash X-ray system to an accuracy of $\pm 0.25^\circ$.

6.5.3 **Measurement of Backing Material**

The depth of the depression or cavity in the backing material and other relevant information (e.g., length, width) should be recorded. The set-up used to measure the back face deformation must be similar to the one shown in Fig. 3.

6.6 **Test Procedures**

6.6.1 **Test Range**

The set-up used to conduct the ballistic tests must be similar to the one shown in Fig. 4. When the launcher used is a powder gun in conjunction with light detectors, the following guidelines apply. The first detector should be placed at least 1.5 m from the muzzle (distance F) of the test barrel to prevent false triggering from muzzle blast. The separation distance (D) between the pair of detectors must be between 0.5 m and 1.5 m. The exact distances used must be specified in the test report. The ballistic shoot-pack must be placed at a distance (R) from the launching device compatible with the velocity measurement systems used and for which the projectile is stable (impact angle less than 3 or 5 deg). When using powder guns, the recommended target distance is 5 meters. For residual velocity measurement using a pair of detectors, the measurement point must be at a maximum distance of 0.5 m away from the target. The separation distance between the two detectors must be 0.5 m.

6.6.2 **Test Range Ambient Conditions**

The ballistic testing must be carried out in a test facility having the standard ambient conditions, i.e. a temperature of $20^\circ \pm 5^\circ$ C and a relative humidity of 65 ± 10 %, or within a maximum time of forty-five minutes after the completion of pre-conditioning. The temperature and humidity measurements may be made with equipment having an

accuracy of at least ±1° C for temperature, and ±3 % for humidity. If variations to these conditions are made then the conditions used must be recorded in the final report.

6.6.3 Test Specimen Selection and Quantity

The test specimens for both the dry and wet test conditions must be a ballistic shoot-pack as defined at Section 3. Only new armour material samples as offered for sale must be tested. The specified quantity of specimens (refer to Tables 4.1, 4.2 and 5), selected at random from a distinct lot/batch, must constitute a statistically valid test series for qualification. Prior to testing, each shoot-pack must be weighed and visually examined to make sure that it is free from defects or other damage. A full description of each test specimen must be provided as specified at section 6.8.1.

6.6.4 Pre-Conditioning of Test Specimens

Prior to ballistic testing, each test specimen must be pre-conditioned to a temperature of 20°±1° C and a relative humidity of 65±5 % for at least twelve hours. For test conditions where the temperature of the test specimen is not the same as the range conditions, the temperature for each test specimen must be measured in degrees Celsius before and after completion of the test. The temperature and % RH of the test laboratory must be recorded at the beginning and completion of a test sequence

6.6.5 Water Immersion Test Conditions (Wet Target)

For testing requiring a wet target, the ballistic shoot-pack must be weighed dry and then submerged vertically (using a clamp system) in water at 15° C to 25° C for a period of thirty (30) minutes. The ballistic shoot-pack is then removed from water and held vertically from two corners and allowed to drain for three minutes. The specimen must be re-weighed and the ballistic test carried out using the specified test method. The first shot should be fired within 5 min of the completion of the draining period and the final shot not more than 40 min later for a maximum test duration of 45 minutes. If the testing has not been completed in the time permitted, the test data must be discarded and wet testing must begin again with a new target sample.

6.6.6 Test Specimen Positioning and Impact Angle

Each ballistic shoot-pack must be mounted on a rigid support with the area to be impacted perpendicular to the line of fire so that each impact is made normal to the intended impact location. The test specimen and the support fixture must be aligned using a laser sighting and mirror system so that the barrel axis coincides with a line normal to the surface of the test specimen at the intended impact location. This procedure must be used to ensure the obliquity angle of the test specimen at the projectile impact point is as close as possible to zero.

6.6.7 Test Specimen Shot Location and Number

The shot spacing and sequences that must be used are illustrated in Figs.11 through 13. A maximum of 18 shots per sample (14 shots typical) for spheres and FSP (Figures 11 and 13) and 9 shots per sample for the larger RCC and the 9 mm bullet (Figure 12). As illustrated in Figures 11 and 12, the shot sequence for the dry tests must proceed from the centre radiating outward in a clockwise direction. For the wet test, the shot sequence is from the left top corner down to the lower right corner (see Fig 13). Since the fibres tend to be strained and pulled in the warp and fill directions, the aim points should be staggered at least 12 mm off the horizontal and vertical lines of any previous point.

The maximum angle of yaw for the RCC and FSP projectiles must be as defined under 'Fair Hits" in the definitions (refer to Table 2). The intended shot locations must be clearly marked directly on the test specimen. The exact location and sequence used must be described in the test report.

Each impact velocity must be measured and recorded and if not within accuracy required, that impact must be disregarded. When two independent sets of instrumentation are used, velocities from each set will be recorded and the mean average of the two velocities must be calculated and used for V_{50} estimation.

Test Sequence	Small Sphere V_{50}	Large Sphere $V_{50\ (Wet)}$	Large Sphere $V_{50\ (Dry)}$	NATO FSP V_{50}	RCC V_{50}	9 mm FMJ VProof
Max Impact Angle	**±3°**	**±3°**	**±3°**	**±3°**	**±3°**	**±3°**
Max YAW Angle	**---**	**---**	**---**	**±5°**	**±5°**	**±3°**
Edge Separation	**>50 mm**	**>50 mm**	**>50 mm**	**>50 mm**	**>50 mm**	**>75 mm**
Shot Separation	**>40 mm**	**>40 mm**	**>40 mm**	**>40mm**	**>75mm**	**>75 mm**
Min. no of shots per sample	**9**	**9**	**9**	**9**	**5**	**5**
Max. no of shots per sample	**18**	**16**	**18**	**18**	**9**	**9**

TABLE 2: Criteria for Fair/Unfair Hits

The angle of impact and the hit locations must conform to the previously defined values for a fair hit. All unfair hits will not count and must be repeated and reported. For the backface deformation test, there are circumstances where the unfair hit can be accepted as a valid hit. These are defined and summarised in Table 3.

Condition	Impact velocity	Shot/Edge Separation Distance	Impact Angle	Impact Fairness	Partial Penetration	Complete Penetration
Normal	OK	OK	OK	**Fair**	**Accepted** Continue	**Accepted** Failure & stop
More severe	OK but previous hit too high	OK	OK	**Fair**	**Accepted** Continue	**Rejected** Retest
More severe	Too high or OK	OK or too short	OK	**Unfair**	**Accepted** Continue	**Rejected** Retest
Less severe	Too low	OK	OK	**Unfair**	**Rejected** Retest	**Accepted** Failure & stop
Less severe	OK	OK	Too high	**Unfair**	**Rejected** Retest	**Accepted** Failure & stop

TABLE 3: Criteria for Accepted/Rejected Hits (Backface Deformation)

If the test conditions are more severe than specified (velocity too high and/or hit separation distance too short), but the performance requirements are met, this will be considered as a valid or accepted hit and count as a pass. If the test conditions are less severe (velocity too low or impact angle too high), and the performance requirements are not met, this will also be considered as a valid hit, but this will constitute a specimen failure.

6.6.8 **Calibration of Measurement Devices**

Before the test procedure begins, all measuring devices must be calibrated to an accuracy that allows them to meet the tolerances described in the relevant section of this document.

6.6.9 **Preparation and Control of the Backing Material**

The forming of the clay must be made using slow pressing in a rigid frame box (metallic or 19 mm thick wood). The minimum inside dimensions of the box must be 610 x 610 with a depth of 140 mm i.e., large enough to sufficiently back the sample to be tested. The clay block should be work thoroughly to eliminate voids and imperfections, i.e., to make it as homogeneous as possible. The rigid frame must be closed on the back side (removable plate allowed). Filling by slow melting of the clay is also allowed as long as no damage occurs.

The clay blocks must then be conditioned at a constant temperature (+/- 1º) between 20º C and 38º C for at least three hours prior to testing such as to obtain the desired consistency. Additional clay, conditioned along with the rigid frame fixture, must be used to fill voids and restore the front surface as needed.

The clay block used as backing material must be changed at least on an annual basis to ensure consistency of the clay. The replacement date must be recorded on the backing material fixture. Complete penetration of target with projectiles will contaminate the clay over time. In order to keep the clay block as clean and pure as possible, the surrounding area around the cavity channel should be removed and the cavity should be re-packed after each complete penetration. The clay block should also be replaced after every 50 complete penetrations.

6.6.10 **Calibration of the Backing Material**

Since clay consistency varies with age and date of manufacture, it must be calibrated by the drop-weight technique using 5 drops at the beginning of each test series and at each four hour time interval and at post-test. The test consists of dropping a steel sphere (63.5 +/- 0.05 mm in diameter, mass 1043+/- 5 g) from a height of 2.0 m at a spacing of at least 75 mm from the fixture edge to indent edge and a minimum of 150 mm between indent centers. Each validation drop will consist of a free fall release and targeted fall of the steel sphere onto the conditioned backing material. The arithmetic mean of each of the five indentations depths measurements must be 19 +/- 2 mm. In addition no indentation must be greater than 22 mm or less than 16 mm.

Failure to meet drop-test depth requirements will result in the invalidation of all shot series since the last drop-test with acceptable depths of indentation, and will require that a new conditioned and drop-test validated backing material fixture be used.

6.6.11 **Velocity Correction Fragment Simulators**

No correction for air drag effect is required for 9 mm bullets. To evaluate the velocity of fragment simulators at the target, the velocity measured at the distance **X** from the target should be corrected to allow for velocity loss due to air drag, and slowing effects caused by detection screens. For air drag corrections the following equations must be used:

$$\mathbf{V_s \text{ or } V_r = V_m + R^*X}$$

Where:

- **R**: ballistic retardation (m/s/m);
- **X**: distance between the measurement point and the target (m);
- $\mathbf{V_m}$: measured velocity (m/s);
- $\mathbf{V_s}$: velocity at the target (m/s);
- $\mathbf{V_r}$: residual velocity (m/s).

When doing correction for residual velocity measurement, the distance ***X*** is negative, i.e., the impact velocity is greater than the measured velocity. To maximise the accuracy of the velocity the distance ***X*** should be kept to a low value. The recommended measurement distances are 1.5 m ahead of the target for the striking velocity, and 1.0 m behind the target for the residual velocity. The retardation used **R** (m/s/m) depends on the shape of the projectile and its velocity at the measurement point.

The following sections give the relationships to be used:

RCC (64 grain)

The retardation ***R*** (m/s/m) is found from:

$$R = 0.01272Vm + 0.1986$$

where:

Vm: measured velocity (m/s)

This equation for ***R*** is valid only for:

$$275 \text{ m/s} < Vm < 450 \text{ m/s}$$

FSP (17 grain)

The retardation ***R*** (m/s/m) is found from:

$$R = 0.0185Vm$$

where:

Vm: measured velocity (m/s)

This equation for ***R(V)*** is valid only for:

$$450 \text{ m/s} < Vm < 700 \text{ m/s}$$

Sphere (1 and 16 grain)

The retardation ***R*** (m/s/m) is found from:

$$R(V) = \frac{\rho \cdot \pi \cdot D^2 \cdot Cd \cdot Vm}{8 \cdot m}$$

where:

Vm: measured velocity (m/s)
D: diameter of sphere (m);
m: mass of the projectile (kg)
ρ : air density (**1.225 kg/m^3**)
C_D: drag coefficient for the projectile

The drag coefficient C_D can be found from:

$$C_D(M) = 0.1045M^3 - 0.7322M^2 + 1.6139M - 0.1245$$

where:

M: Mach number. ***M = Vm/a; a* = 340 m/s (speed of sound)**

This equation for C_D is valid only for:

$$340 \leq Vm \leq 1000$$

For lower velocities, C_D can be evaluated from:

$$C_D(M) = 0.9224M^3 - 0.8595M^2 + 0.2718M + 0.4501$$

This equation of C_D is valid only for:

$$0.0 < Vm < 340$$

An alternative method for velocity correction for air retardation is the direct measurement of the retard by means of measurements of the velocity at multiple distances, two distances being a minimum, or the use of a Doppler radar system.

6.7 Test Sequence

6.7.1 V_{50} Test Sequence (*modified up-and-down method*)

At least 14 valid impacts (N_T) (normal incidence) must be done per V_{50} test using the shot pattern defined in Figures 11 through 13 as applicable. All firings must be conducted after the samples have been conditioned and must continue until the total required number of fair hits is obtained. The identification of shots as perforation or non-perforation must be made after each firing by inspecting the paper witness sheet. Ensure that the witness sheet material is mounted in the appropriate position behind the test specimen. After each complete penetration shot on the ballistic shoot-pack, the corresponding hole in the witness sheet should be marked and numbered with a felt pen. Whenever excessive damage occurs to the witness sheet material, it must be replaced with a new one before the next test sequence. The velocity of each shot must be adjusted using the most appropriate technique using the recommended modified up and down sequence as follow:

- Shot no 1 to N_{T-2} done using modified up-and-down procedure

- Shot no N_{T-1} done at the lowest complete penetration (*LCP*) velocity

- Shot no N_T done at the highest partial penetration (*HPP*) velocity

V_1 **= estimated** V_{50}

$V_i = V_{i-1} + \Delta V$, where ***Vi*** = intended velocities, *i* = 2-14;
and where ΔV is the fixed velocity increment or decrement to use.

For the first V_{50} sample evaluation $(V_{50})_1$, ΔV **must** be:

$\Delta V = +20$ (if previous shot is partial as per examination of paper witness plate)

$\Delta V = -20$ (if previous shot is complete)

for the subsequent V_{50} sample evaluation $(V_{50})_{2\text{-}4}$, ΔV **must** be:

$\Delta V = +15$ (if previous shot is partial)

$\Delta V = -15$ (if previous shot is complete)

As described previously, the modified up and down method is based on the use of a fixed velocity increment for each V_{50}. The intended velocity is also used to specify the next firing velocity instead of the actual velocity obtained. These two modifications make the test less sensitive to test series where the control of velocity may not be as precise as needed.

The firings must continue (more than 14 shots may be required) until the five (5) lowest velocities for complete penetrations and the five (5) highest velocities for partial penetrations are within a velocity spread of 60 m/s. A ZMR occurs when a partial penetration occurs at a higher velocity than at least one complete penetration. The ZMR is the difference between the LCP velocity and the HPP velocity actually obtained. The ZMR for each V_{50} must be less than 60 m/s. If the ZMR is greater than 60 m/s, and that the difference between the HPP and the second HPP velocity is more than 20 m/s, the HPP shot could be considered as an outlier round and it could be rejected. This may allow the ZMR to be below 60 m/s. This is a conservative approach since it will effectively reduce the V_{50} measured. If one of these two conditions is not achieved, a new sample should be selected for testing.

It is also necessary that the following additional conditions are complied with in order for the Probit analysis to work adequately:

6.7.1.1 The shot with the lowest impact velocity should be a partial penetration and it should not be separated from the LCP by more than 20 m/s.

6.7.1.2 The shot with the highest impact velocity should be a complete penetration and should not be separated from the HPP by more than 20 m/s.

If anomalous results occur, extra rounds must be fired to provide further information or the testing should be repeated using a new set of test specimens.

6.7.1.3 **Calculation of the V_{50}**

The V_{50} and standard deviation for each sample must be computed by applying a maximum likelihood statistical analysis (DREV Probit) based on the cumulative normal distribution using all fair shots. If the V_{50} cannot be attained using one sample (e.g. for 64 grain RCC), because the specified velocity spread is not respected or insufficient fair impacts can be done on one shoot-pack, testing should be continued on a second shoot-pack from the same lot; the V_{50} can then be computed from the results obtained with these two samples. The arithmetic V_{50} must be also computed for reference use by taking the arithmetic average of ten (10) fair impact velocities consisting of the 5 highest velocities for partial penetration and the 5 lowest velocities for complete penetration within a velocity spread of 60 m/s. If a different method is used to compute the V_{50}, it must be clearly indicated in the test report by referencing to the standard followed.

6.7.1.4 **V_{50} Compliance Verification**

A valid ballistic fill material must be declared as being in compliance with the performance requirements if the calculated V_{50} for each solution exceeds the minimum individual value for specified conditions and all other requirements are met. The average of the combined tests (MV_{50}) for each projectile will be rated against the minimum specified requirements and the spread must be within 30 m/s. If the minimum requirements are not met, then the testing must be repeated using new samples selected at random from the same lot.

6.7.2 **Back face Deformation Resistance Test Sequence**

A sufficient number of pre-test rounds must be fired to have a reasonable assurance that each test round (9 mm FMJ bullets) will have a striking velocity within the defined velocity spread allowed. The test specimen must be weighed and placed on the clay backing material using two elastic bands to restrict its movement from the original position. The placement of the elastic bands will be such that they do not interfere with the impact point on the sample and they do not introduce significant stresses in the target material. The distance between the bands must be approximately 150 mm centered to the intended impact location.

One test specimen must be fired at the five impact locations (refer to Fig. 12) using the appropriate weapon and projectile such as to ensure that the angle of yaw is less than 3°. Penetration by any fair shot or penetration by a projectile at a velocity lower than the minimum required impact velocity must constitute a failure to meet the required protection level. While one specimen may be sufficient to complete the number of shots required, unfair impacts may require additional samples. A maximum number of 9 shots must be fired per shoot-pack. Any unfair impact must be disregarded in evaluating compliance with the requirements.

After each shot, the inside surface of the test specimen must be examined and any visible evidence of a complete penetration must be recorded. The backface

deformation will be measured from the original planar surface of the prepared clay media using an appropriate depth gauge measurement tool (refer to Fig. 3).The test specimen must be repositioned and flattened to ensure consistency. The specimen must be restored as closely as practical to its original state, ensuring that the layers are smoothed as flat as possible. After every 30 min., consistency of the clay backing material should be measured using the pocket penetrometer to ensure that the required conditions are maintained.

Should the results of any fair impact produce a complete penetration, or indentation exceeding 50 mm the protective material must be declared non-compliant with the performance requirements. Any unfair impact must be disregarded in evaluating compliance with the requirements. A minimum of five fair impacts out of nine possible impacts on one panel must be obtained to make a valid sample test. When fewer than 5 fair impacts are obtained, the test specimen must be rejected and replaced by a new one from the same lot and the test repeated.

6.7.2.1 **Back face Deformation Compliance Verification**

A test specimen must be declared as being in compliance with the performance requirements if the backface deformation for any of the fair impacts is less than 50mm and no complete penetration of the armour material must occur.

6.8 **Test Report**

6.8.1 A ballistic test report must be prepared incorporating the following information:

6.8.1.1 Date(s) of test series and name and location of facility.

6.8.1.2 Sampling procedure, and full description of each ballistic shoot-pack set tested including: weight, size, thickness, number of plies, and plies sequence (hybrid), nominal areal density, quilting pattern (if applicable) material type, manufacturer and lot number.

6.8.1.3 For each test series the barrel calibre, length, and twist if applicable, the specimen mounting configuration, and the precise projectile description.

6.8.1.4 Temperature and humidity at the test facility, and sample pre-conditioned temperature if different from test facility.

6.8.1.5 For each impact, the location of impact (shot pattern no), intended and actual striking velocities obtained, partial or complete penetration, fair or unfair hit, accepted or rejected impact.

6.8.1.6 For each V_{50} test, firing sequence used, V_{50} computed using the maximum likelihood method, lowest complete penetration, highest partial penetration, zone of mixed results, and velocity spread for the ten values considered.

6.8.1.7 For the combination of all V_{50} test values (as specified within) using a given projectile, average values obtained (MV_{50}), and velocity spread of the group.

6.8.1.8 For the backface deformation test, indentation depth and number of plies penetrated for each impact, and average depth for the 5 accepted impacts.

6.8.1.9 For each series, state compliance against ballistic performance requirements.

6.8.1.10 Provide supplementary information or remarks pertinent to the conduct of the test, or behaviour of the material.

6.8.1.11 Provide names of the testing personnel, and all witnesses present.

7 MODIFIED CIRCULAR BEND TEST METHOD

7.1 SCOPE

7.1.1 This test method covers the determination of the stiffness / flexibility of fabrics by the modified circular bend procedure.

7.1.2 This test method is applicable to most of the fabric types. The sample is a multi-layer system as in current soft armour systems.

7.1.3 This procedure does not purport to address all of the safety concerns associated with its use. It is the responsibility of the user of this specification to establish appropriate safety and health practices and determine the applicability of regulatory limitations prior to use.

7.1.4 The values stated in SI units or inch-pound units are to be regarded separately. Within the text, the inch-pound units are shown in brackets. The values stated in each system are not necessarily exact equivalents; therefore, each system should be used independently of the other.

7.2 TERMINOLOGY

7.2.1 Circular bend - simultaneous, multidirectional deformation of a fabric where one face of a flat specimen becomes concave and the other becomes convex.

7.2.2 Stiffness - resistance to bending. With regard to the circular bending of fabrics, resistance to multidirectional bending expressed as a predefined slope on the force-displacement curve when a specimen is pushed through an orifice.

7.2.3 Flexibility - Compared to stiffness, the lower the stiffness is, the higher the flexibility will be.

7.3 SIGNIFICANCE AND USE

7.3.1 The modified circular bend test gives a force per unit length value related to fabric stiffness, simultaneously averaging stiffness in all directions. The stiffness gives the indication of the flexibility of the fabric.

7.3.2 The modified circular bend test is simple to perform and is suitable for most multi-layer systems that cannot be accurately measured by the existing test methods. This method is a modification from ASTM D4032 in order to account for multiple-ply fabrics.

7.4 SUMMARY OF TEST METHOD

7.4.1 The modified circular bend test consists of pushing a multi-layer system through a 101.6mm (4”) ∅ orifice in a platform, using a hemispheric 25.4 mm (1”) ∅ plunger. The fabric stiffness / flexibility can then be evaluated by studying the results of the average maximum secant slope found after a 30 mm displacement. See secant slope definition in section 7.10.

7.5 APPARATUS

7.5.1 Testing Machine - for instance servo-hydraulic or standard screw driven machines. The testing machine must be in conformance with practice ASTM E6, and must satisfy the following requirements**:**

7.5.1.1 **Testing Machine Heads** - The testing machine must have both an essentially stationary head (base) and a movable head (crosshead).

7.5.1.2 Drive Mechanism - The testing machine drive mechanism must be capable of imparting to the crosshead a controlled velocity with respect to the base.

7.5.1.3 Load and displacement Indicator - The testing machine load and displacement sensing devices must be capable of indicating the total load being supplied to the test specimen and the vertical displacement with an accuracy of ±1% of the indicated values or better.

7.5.2 Modified Circular Bend Stiffness Set-ups (refer to Figs 15 to 21), must have the following parts:

7.5.2.1 Supporting Frame (refer to Figs. 15 and 16), 203 x 305 x 127 mm (8 x 12 x 5 in.), or equivalent, steel box, with a 152mm (6 in.) diameter orifice at the top surface. The top surface plate is 12 mm (0.5 in.) thick. The structure is fixed to the testing machine base.

7.5.2.2 Platform, 203 x 203 x 6 mm (8 x 8 x 0.25 in.) or equivalent, smooth-polished steel, with 102 mm (4 in.) diameter orifice (refer to Figs. 16 and 17). The lap

edge of the orifice should be rounded at a radius of 3.2 mm (0.125 in.). For smoothness and uniform friction conditions, one ply of a polyester lining (Commercially available polyester lining with the following average characteristics: areal weight: 66± 4 gr/m²; thickness = 0.075± .01 mm (0.003 in), having the same size as the specimen, is laid on the top surface (refer to Fig. 18).The polyester lining has the same size as the specimen and must bend freely with it. The platform is placed on the top the supporting structure.

7.5.2.3 Plunger, hemispherical, 25.4 mm (1 in.) ∅ (refer to Figs. 15 and 19), smooth-polished steel. The plunger, mounted on the testing machine crosshead, should be concentric with the platform's orifice. The bottom of the plunger should be flush in contact with the specimen top surface. The downward force is applied from this position.

7.5.2.4 A scale that is capable of weighing items to the nearest 1.0 mg.

7.5.2.5 A thickness or dial gauge that is capable of measuring to the nearest 0.01 mm.

7.6 PREPARATION OF TEST SPECIMENS

7.6.1 Cut specimens square from new and unused material. The specimen dimensions must be 152 x 152mm (6 x 6 in.). The specimens must be free of any stitching pattern, unless a quilted solution is proposed.

7.6.2 Prepare a minimum of 10 specimens for each sample. Ten individual results must be used for the material's flexibility calculations.

7.6.3 Avoid selvages, end pieces, and creased or folded places.

7.6.4 Handle the specimens as little as possible.

7.7 CONDITIONING

7.7.1 Bring the specimens to moisture equilibrium, as directed in ASTM D 1776. The standard atmosphere for testing textiles is 21 ± 1° C (70 ± 2° F) and 65 ± 2 % relative humidity. However, an environment with a temperature of 23 ± 2° C (73.4 ± 3.6° F) and a relative humidity of 50 ± 5 % is acceptable.

7.8 TEST PROCEDURE

7.8.1 Measure the dimensions of the specimen, its thickness and its weight.

7.8.2 Test the adequately conditioned specimens in a standard atmosphere for testing as described in section 7.8.1.

7.8.3 Handle the test specimens carefully to avoid altering the natural state of the material.

7.8.4 Select a load cell with a capacity in order to have the results within 10 and 90 % of its total range.

7.8.5 Mount the platform supporting structure, the platform and the selected plunger, with the plunger concentric with the orifice.

7.8.6 Set the crosshead speed to 15 mm/mn (0.6 in./mn).

7.8.7 Set the data acquisition rate to at least 6.67 points per second.

7.8.8 Centre the specimen on the orifice platform below the plunger, using the centering marks. For non-symmetric hybrid plies lay-up, the face in contact with the body must be the bottom layer in contact with the lining material.

7.8.9 Lower the plunger to bring it tangent with the top of the specimen without pushing on it.

7.8.10 Re-initialise the load and the displacement.

7.8.11 Start the test and record the load versus the vertical displacement until the specimen is pushed through the orifice. Avoid touching the specimen during testing. Discard results where the specimen undergoes any other external force other than that supplied by the test machine.

7.8.12 Continue as directed in section 7.8.8 through 7.8.11 to test the remaining specimens.

7.9 ANALYSIS

7.9.1 For the set-up, compute the following data for all type of materials:

7.9.1.1 Areal density of the individual specimens.

7.9.1.2 Trace load-displacement curves for each individual specimen.

7.9.1.3 Determine the maximum load after 30 mm displacement (P).

7.9.1.4 Determine the displacement (D) associated with this maximum load found previously (P).

7.9.1.5 Secant Slope General Calculation Procedure. This slope method is defined as a line between two points: the origin (zero) and the maximum load found after 30 mm displacement. (refer to Fig. 21)

- Determine the slope of the linear curve (S) between zero and the displacement (D) corresponding to a maximum load found after 30 mm (P) as follows: S = P/D

- Repeat steps for each specimen.

- To calculate the average maximum secant slope for a particular material, do the average of all calculated maximum secant slopes of each specimen.

- If a curve has a secant slope value that is 3 standard deviations away from the average value calculated previously, eliminate that curve and recalculate the average maximum secant slope value.

- Calculate the standard deviation for each average maximum secant slope value.

7.10 MODIFIED CIRCULAR BEND TEST REPORT

A Modified Circular Bend Test Report must be generated with the following details recorded:

7.10.1 State that the specimens were tested as directed by this procedure. Describe the material or product tested.

7.10.2 Report the following information:

7.10.2.1 Individual areal density, average areal density and the standard deviation.

7.10.2.2 Individual thickness, average thickness and the standard deviation.

7.10.2.3 Load-displacement curves.

7.10.2.4 Average maximum secant slopes after 30mm displacement and standard deviations.

7.10.2.5 Bar chart histograms of all materials.

7.10.2.6 Number of specimens tested.

7.10.2.7 Test machine type and set-up description.

Test Sequence	V_{50} 17 gr FSP	V_{50} (Dry Test) 16 gr Sphere	V_{50} (Wet Test) 16 gr Sphere
Minimum no of shoot-packs	3	3	3
Minimum no of fair shots per V_{50}	14	14	14
Total no of fair shots	42	42	42
Nominal impact angle (deg)	0	0	0
Max. impact angle (deg)	5	3	3
Armour sample conditioning	Section 6.6.4 Dry	Section 6.6.4 Dry	Section 6.6.5 Wet
Witness/Backing material	Section 6.3.1	Section 6.3.1	Section 6.3.1
Target retention	Rigid Frame	Rigid Frame	Rigid Frame
Calibration V_{50} (m/s) (Lexan 9034 sheet)	**405±10** (12.37-mm sheet)	**405±10** (9.12-mm sheet)	**405±10** (9.12-mm sheet)
Min. individual V_{50} (m/s)	**500**	**455**	**415**
Min. average MV_{50qc} (m/s) (average of 3 V_{50})	**$\geq$0.97xV_{50ca}**	**$\geq$0.97xV_{50ca}**	**$\geq$0.97xV_{50ca}**
Max diff. in 3 V_{50} tests (m/s)	**30**	**30**	**40**
Max individual ZMR (m/s)	**60**	**60**	**70**
Max average ZMR (m/s) (3 V_{50} tests)	**50**	**50**	**60**

TABLE 4-1: Preproduction Qualification Summary of Ballistic Fill

Test Sequence	V_{50} 1 gr Sphere	V_{50} 64 gr RCC	VProof 9 mm FMJ bullet
Minimum no of shoot-packs	3	6 (2 samples /V_{50})	1
Minimum no of fair shots per V_{50}	14	14	---
Total no of fair shots	42	42	5
Nominal impact angle (deg)	0	0	0
Max impact angle (deg)	3	3	3
Armour sample conditioning	Section 6.6.4 Dry	Section 6.6.4 Dry	Section 6.6.4 Dry
Witness/Backing material	Section 6.3.1	Section 6.3.1	Section 6.3.2
Target retention	Rigid Frame	Rigid Frame	2 elastic bands with patting down between shots
Calibration V_{50} (m/s) (Lexan 9034 sheet)	**562±10** (5.80 mm sheet)	**275±10** (12.37 mm sheet)	**---**
Proof velocity, V_p (m/s)	---	---	**365±7** 5 shots with no perforation
Backface deformation (*BD*)	---	---	**mean *BD*<44 mm max individual *BD* <50 mm**
Min. individual V_{50} (m/s)	**525**	**350**	---
Min. average MV_{50qc} (m/s) (average of 3 V_{50})	**≥0.97x*V50ca***	**≥0.97x*V50ca***	---
Max diff. in V_{50} tests (m/s)	**30**	**30**	---
Max individual ZMR (m/s)	**60**	**60**	---
Max average ZMR (m/s) (combined V_{50} tests)	**50**	**50**	---

TABLE 4-2: Preproduction Qualification Summary of Ballistic Fill

Test Sequence	V_{50} 1 gr Sphere	V_{50} (dry test) 16 gr Sphere	V_{50} 17 gr FSP	V_{50} (wet test) 16 gr Sphere
Min no. of shoot-packs per material lot for 3 V_{50}	3	3	N/A	N/A
Min no. of shoot-packs per sub-lot for V_{50}	N/A	N/A	1	1
Min no. of fair shots per test	14	14	14	14
Min total no of fair shots	42	42	14	14
Nominal impact angle (deg)	0	0	0	0
Max impact angle (deg)	3	3	3	3
Armour sample conditioning	Section 6.6.4 Dry	Section 6.6.4 Dry	Section 6.6.4 Dry	Section 6.6.5 Wet
Witness material	Section 6.3.1	Section 6.3.1	Section 6.3.1	Section 6.3.1
Target retention	Rigid Frame	Rigid Frame	Rigid Frame	Rigid Frame
Min individual *V50* (m/s)	**525**	**455**	**CONTROL 500**	**415**
Min average M*V50qc* (m/s) (average of 3 V_{50})	**≥0.97x*V50ca***	**≥0.97x*V50ca***	N/A	N/A
Max difference in 3 V_{50} tests (m/s)	30	30	N/A	N/A
Max individual ZMR (m/s)	60	60	60	60
Max average ZMR 3 V_{50} tests (m/s)	50	50	N/A	N/A

TABLE 5: Quality Control Ballistic Material Lots

LIST OF FIGURES

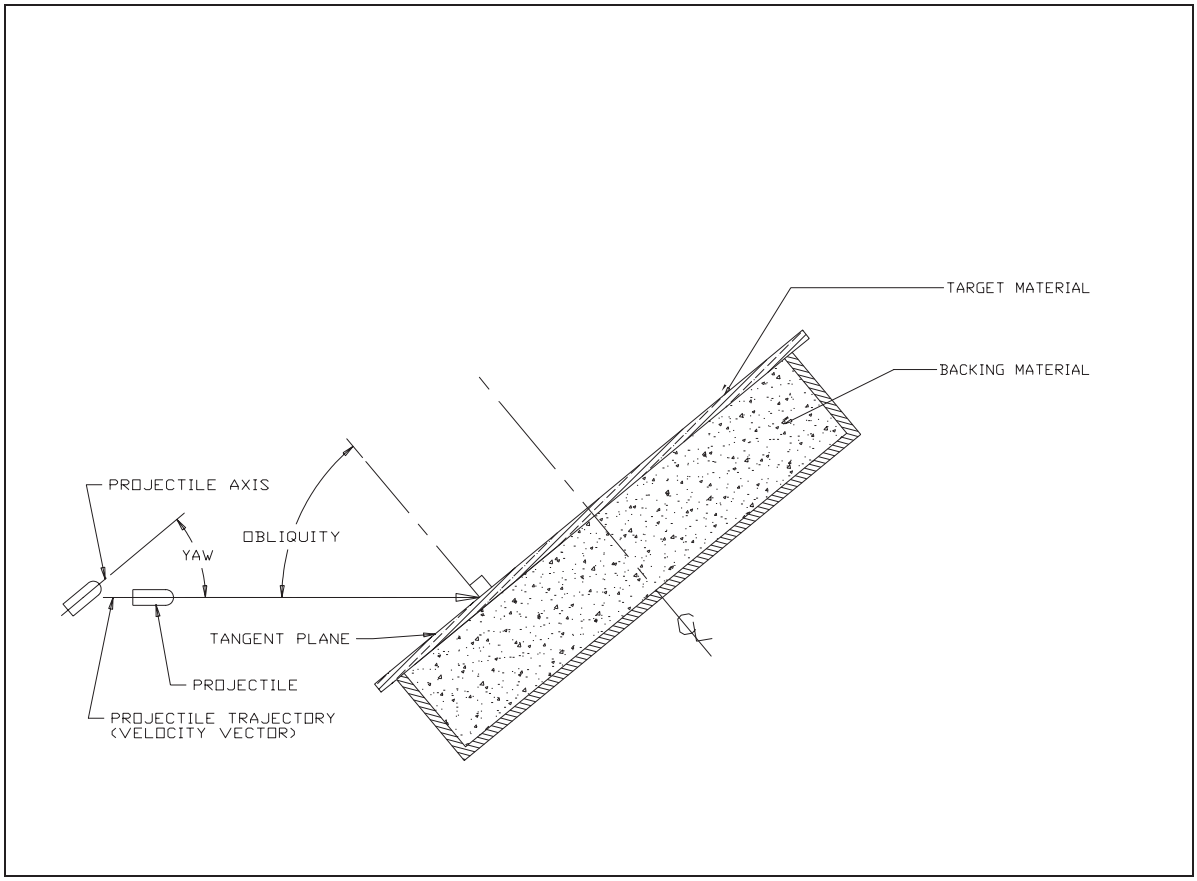

Figure 2: Angle of Impact and Yaw

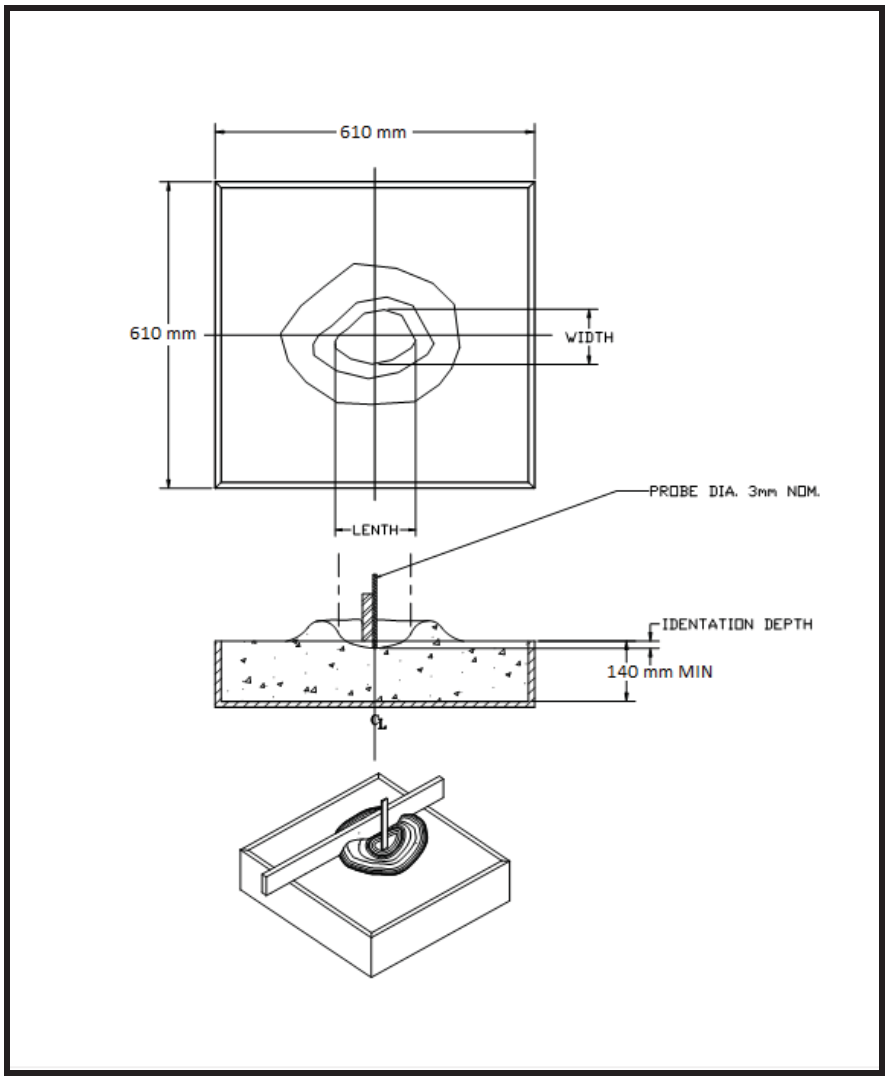

Figure 3: Clay Block Dimensions and Cavity Measurement

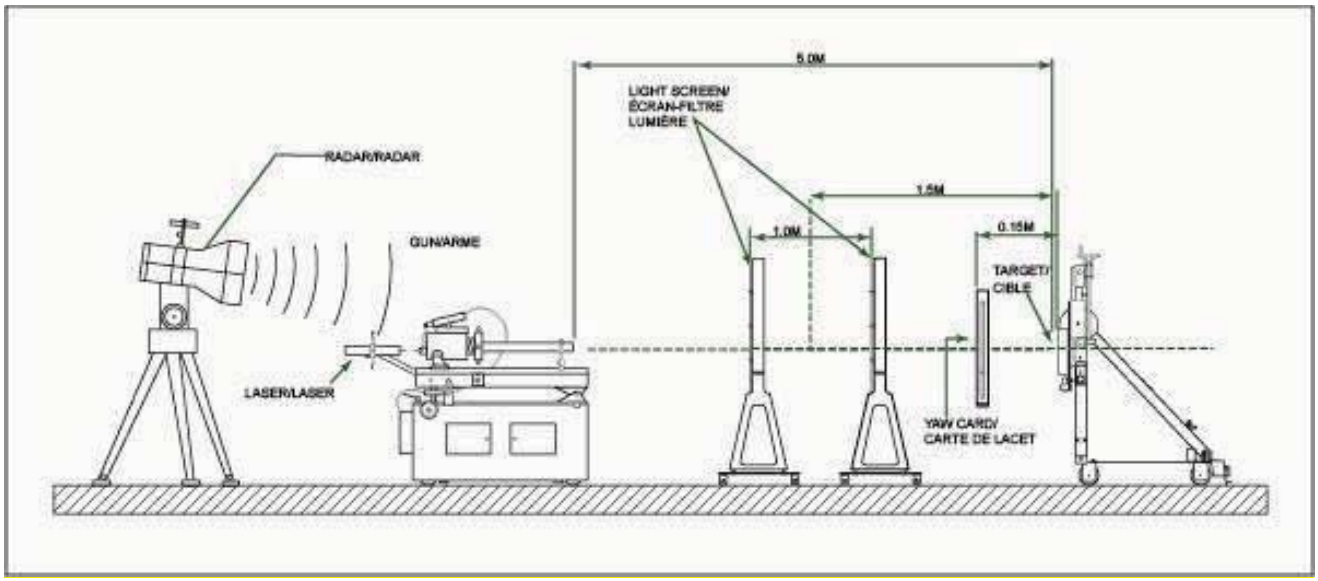

Figure 4: Typical set-up used for Ballistic Testing

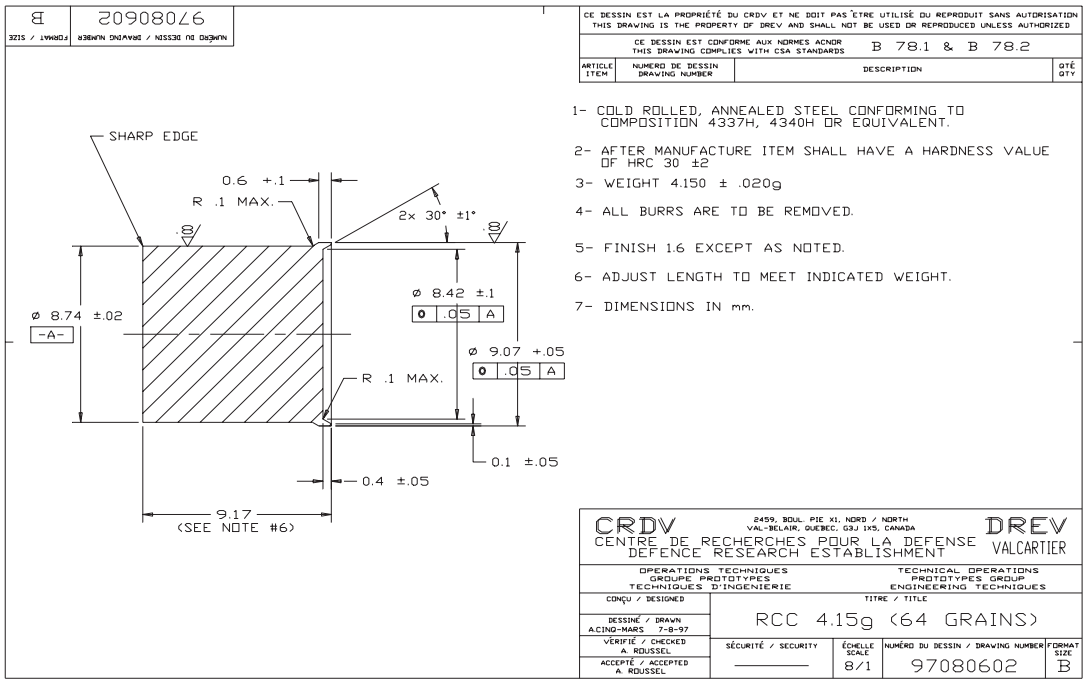

Figure 5: Right Circular Cylinder (RCC) Dimensions

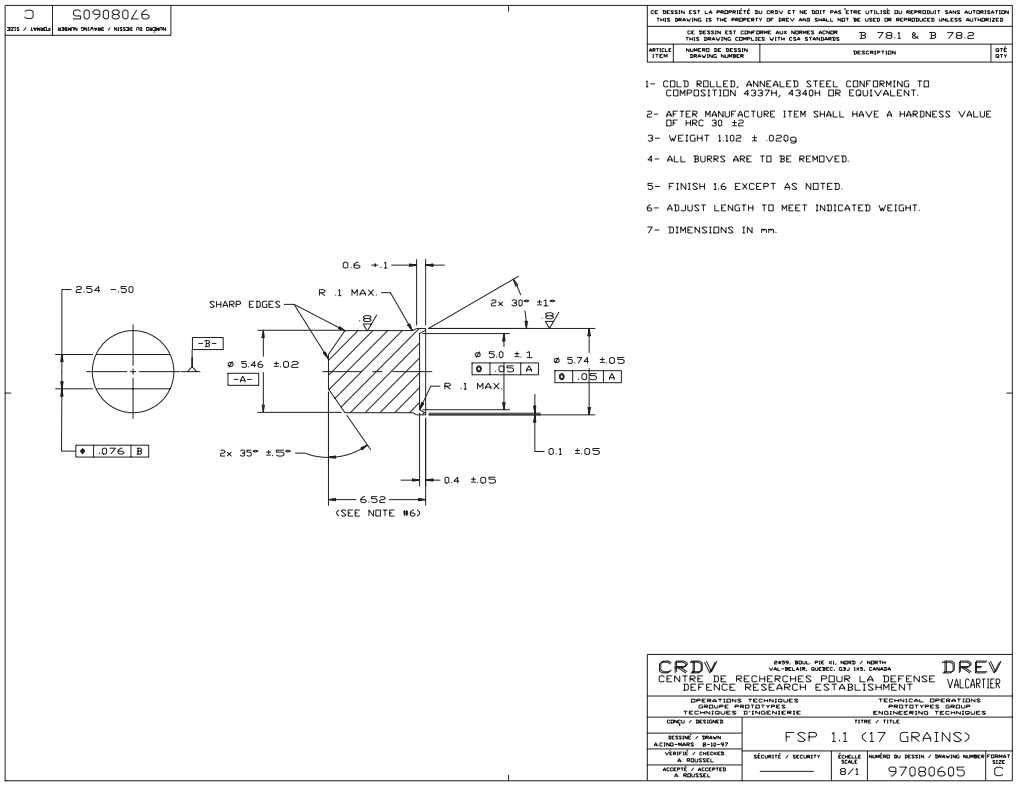

Figure 6: Fragment Simulating Projectile (FSP) Dimensions

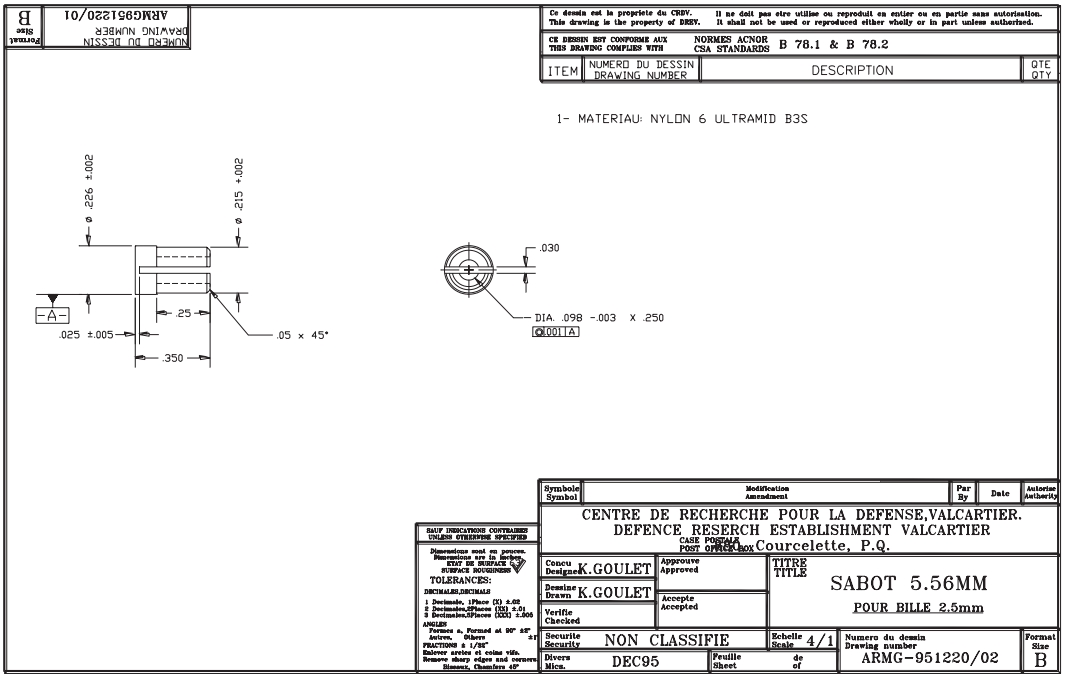

Figure 7: Plastic Sabot for Launching 1-grain Sphere

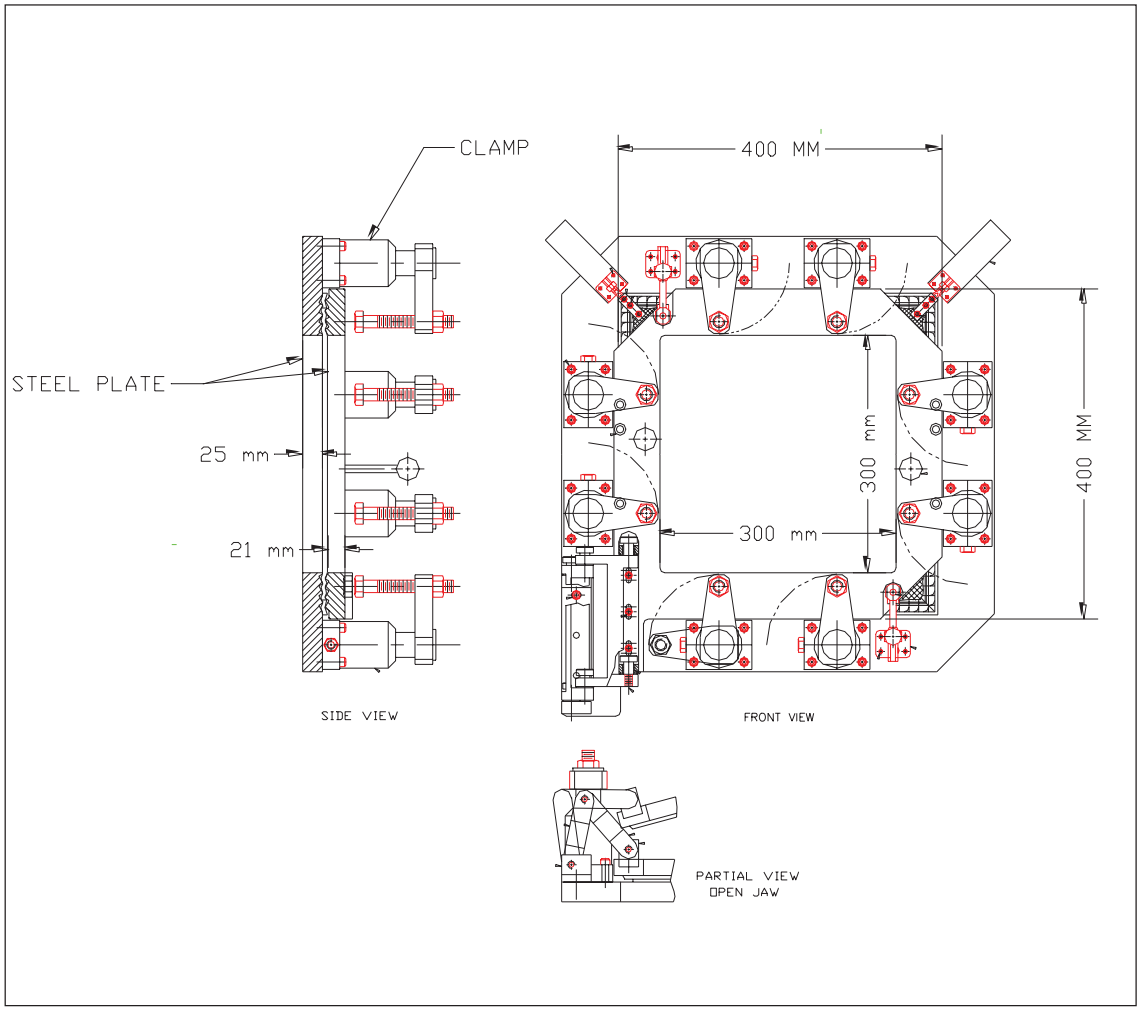

Figure 8: Shoot-Pack Clamping Fixture

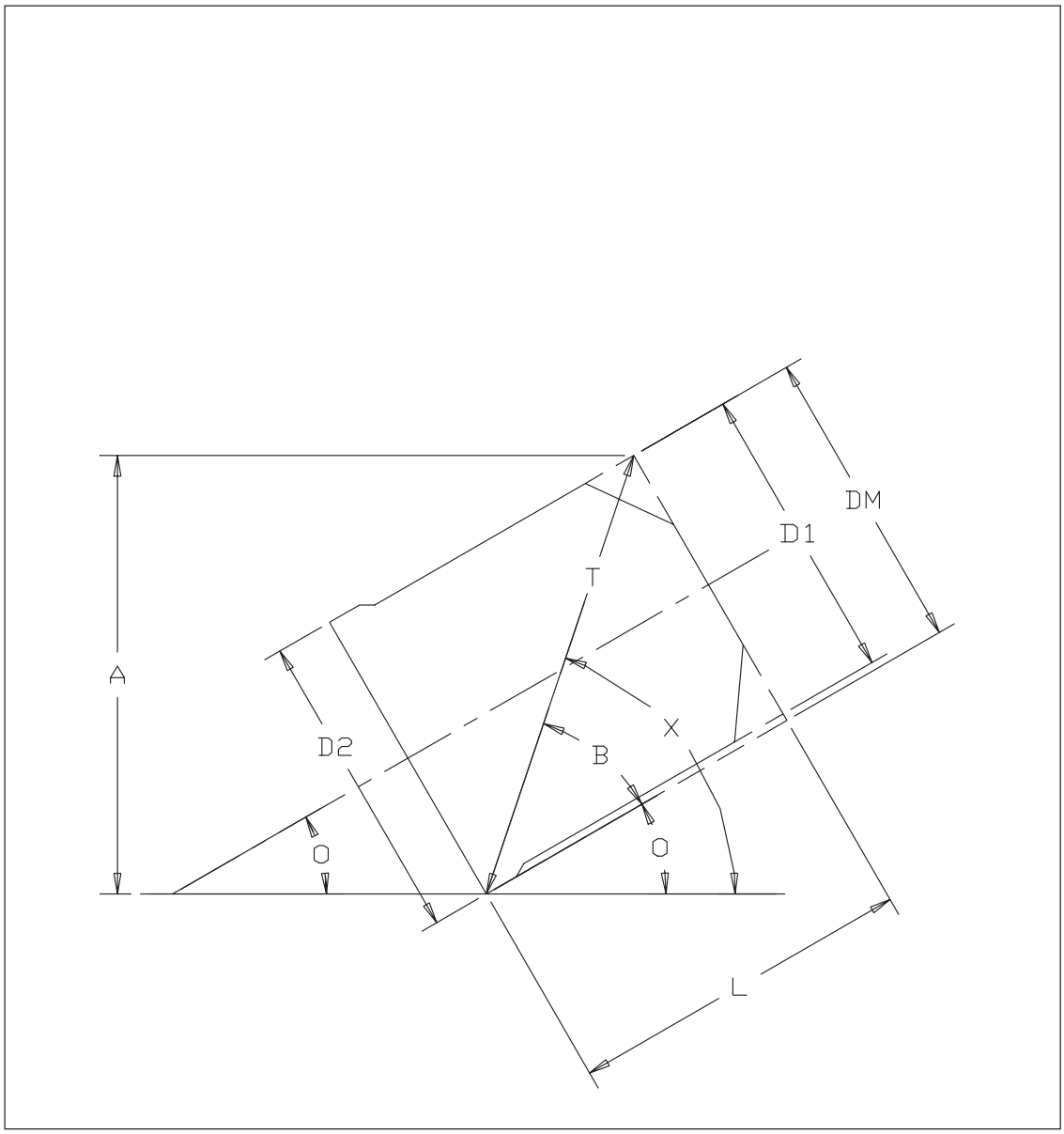

Figure 9: Yaw Measurement with Paper Card

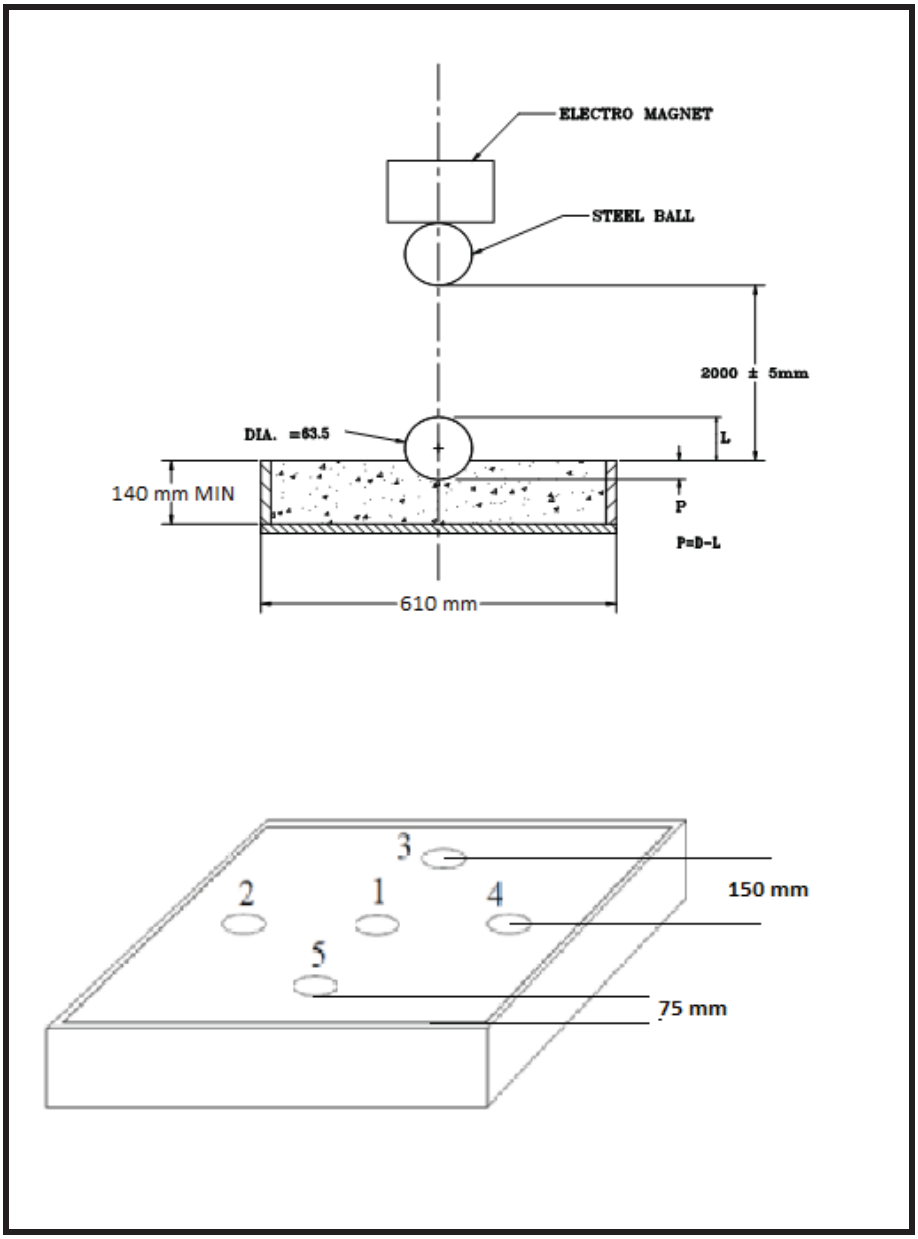

Figure 10: Clay Block Calibration

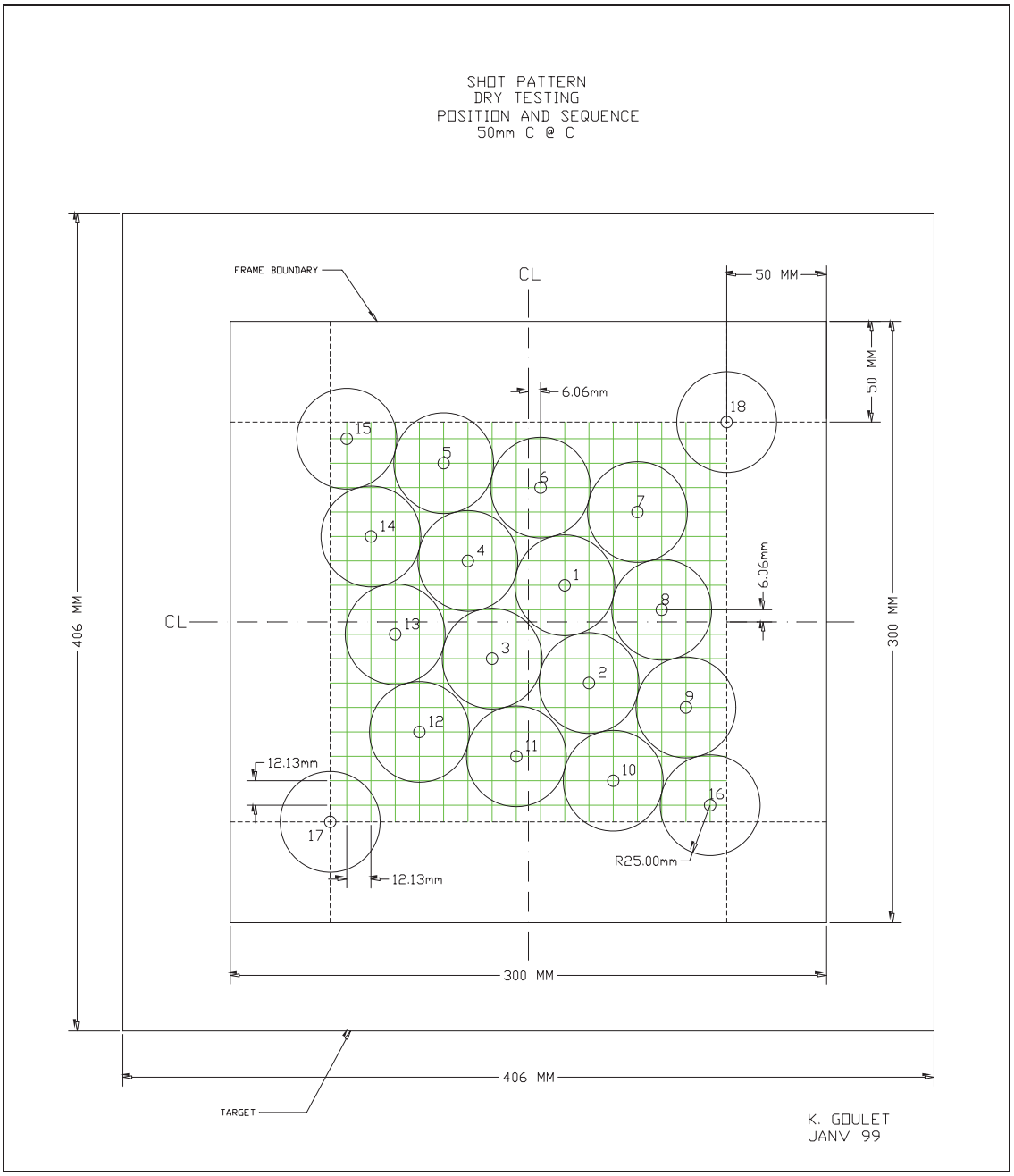

Figure 11: Shot Pattern for Projectiles ≤7 mm Diameter (Dry Target)

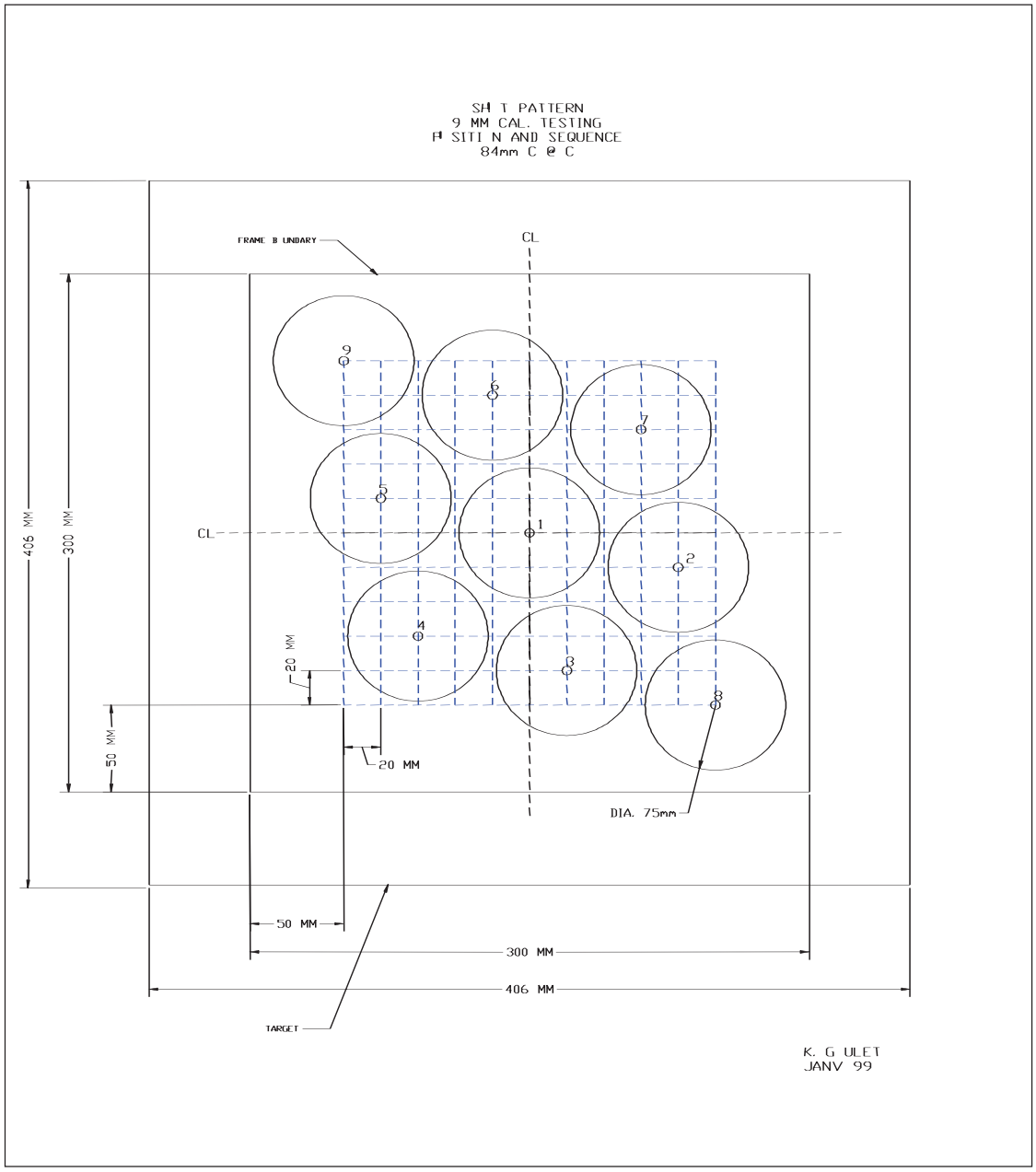

Figure 12: Shot Pattern for Projectiles >7 mm Diameter (Dry Target)

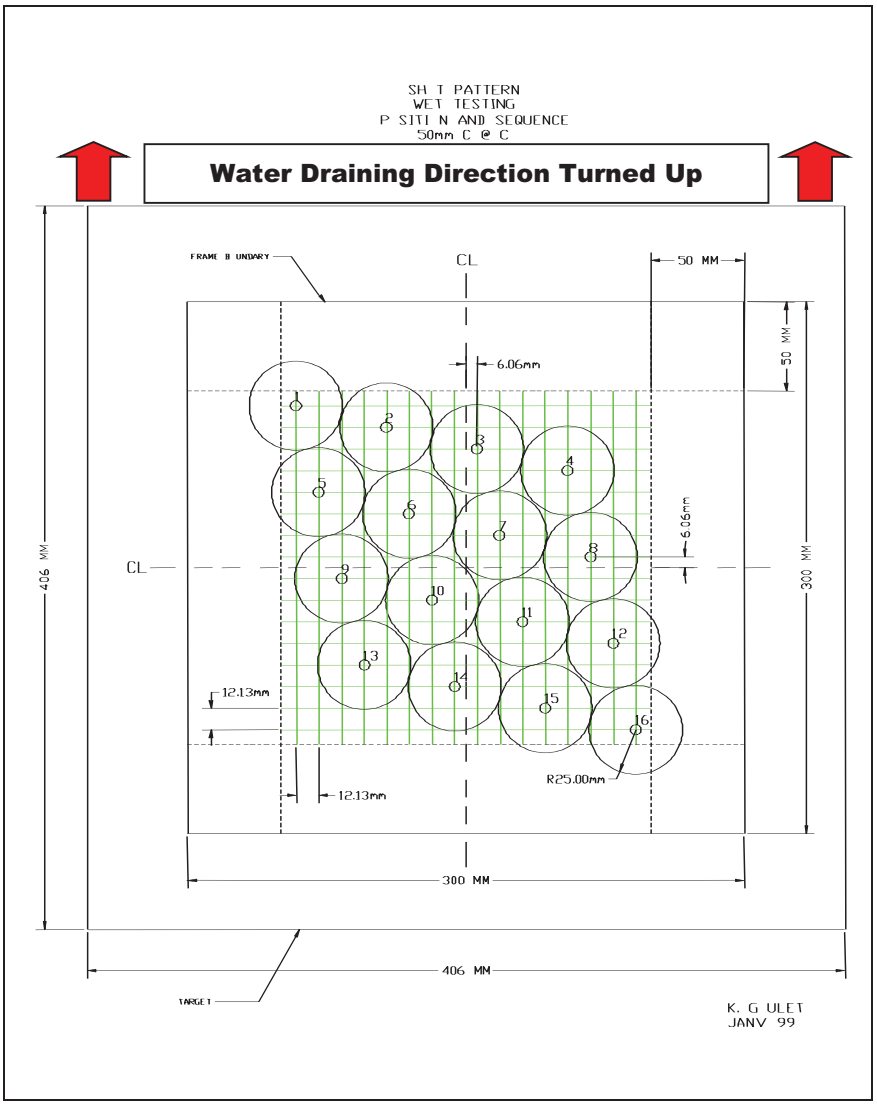

Figure 13: Shot Pattern for Projectiles ≤7 mm Diameter (Wet Target)

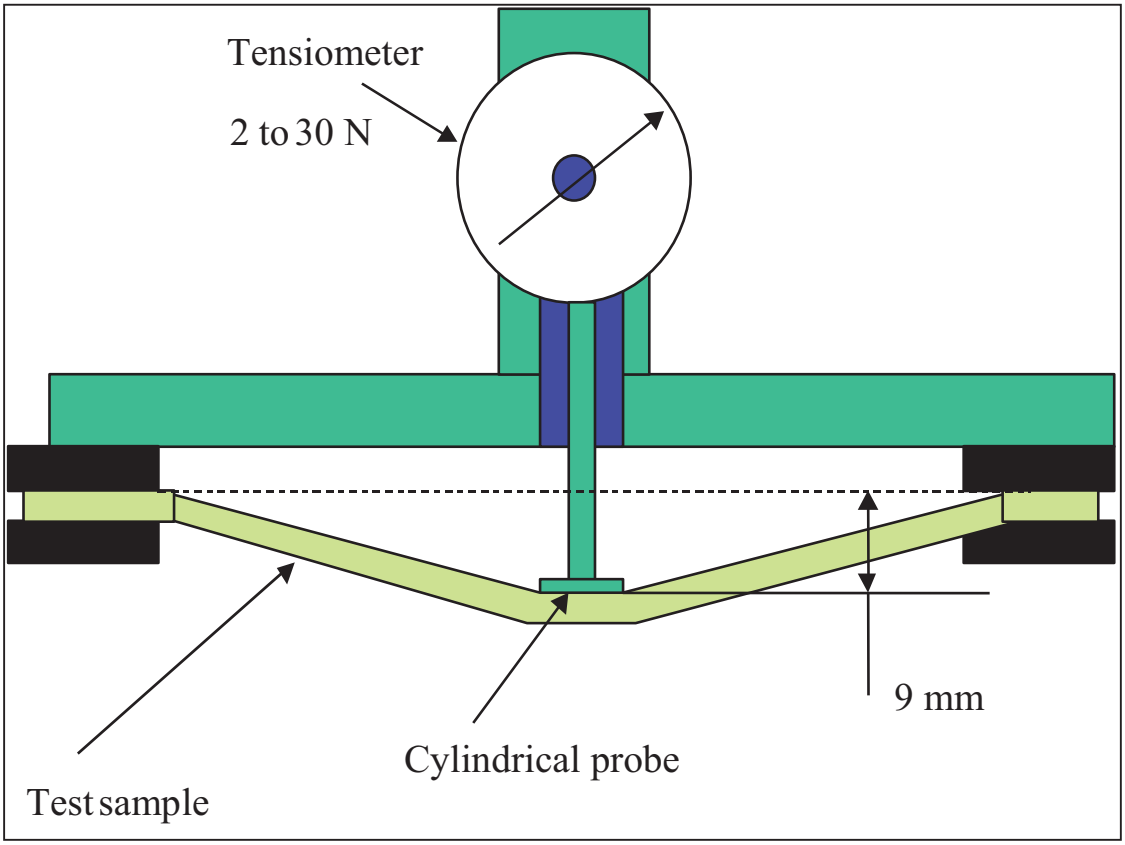

Figure 14: Test Device for Measuring Ballistic Shoot-Pack Tightness

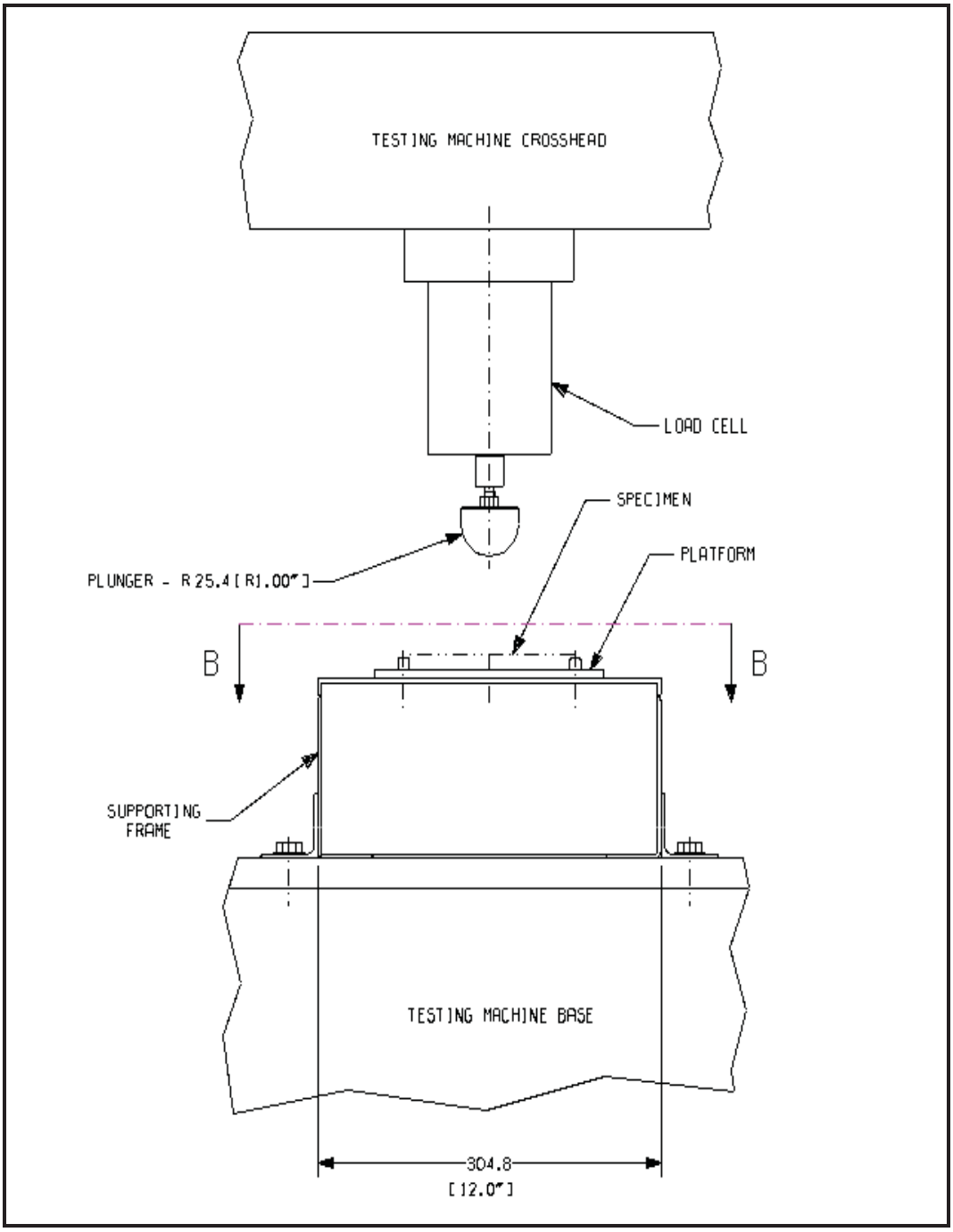

Figure 15: General View of the New Test Method

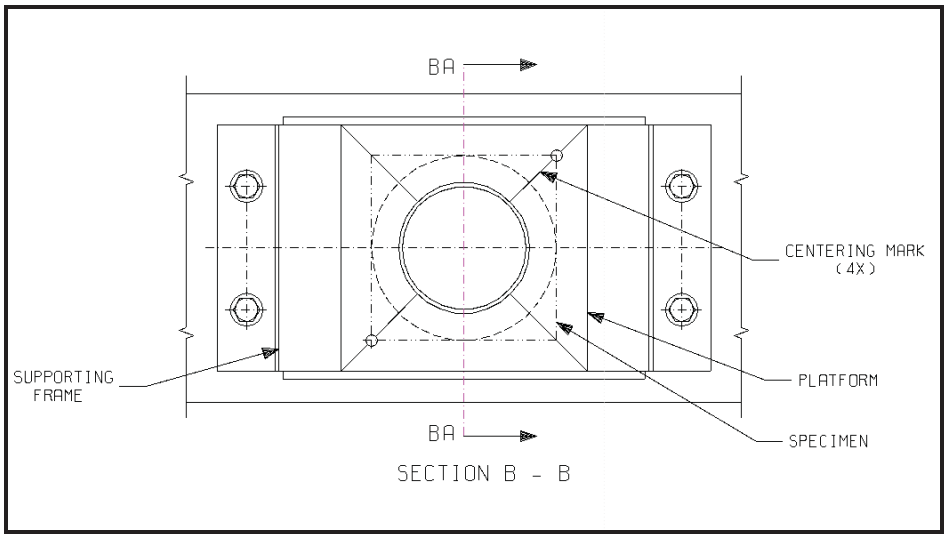

Figure 16: Test Set-up Supporting Frame and Platform: Section BB from Figure 15

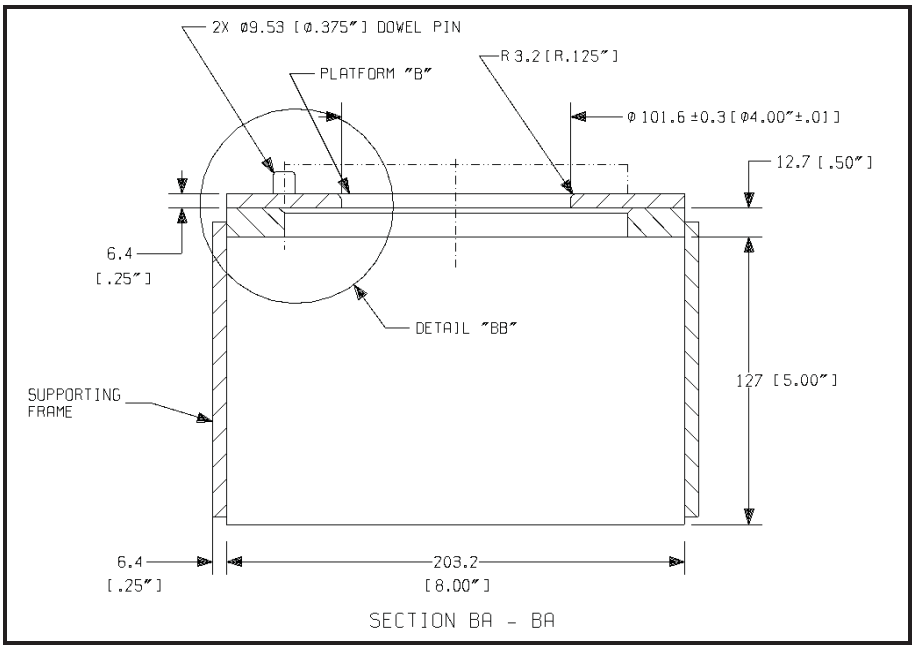

Figure 17: Test Set-up Supporting Frame and Platform: Section BA-BA from Section BB from Figure 16

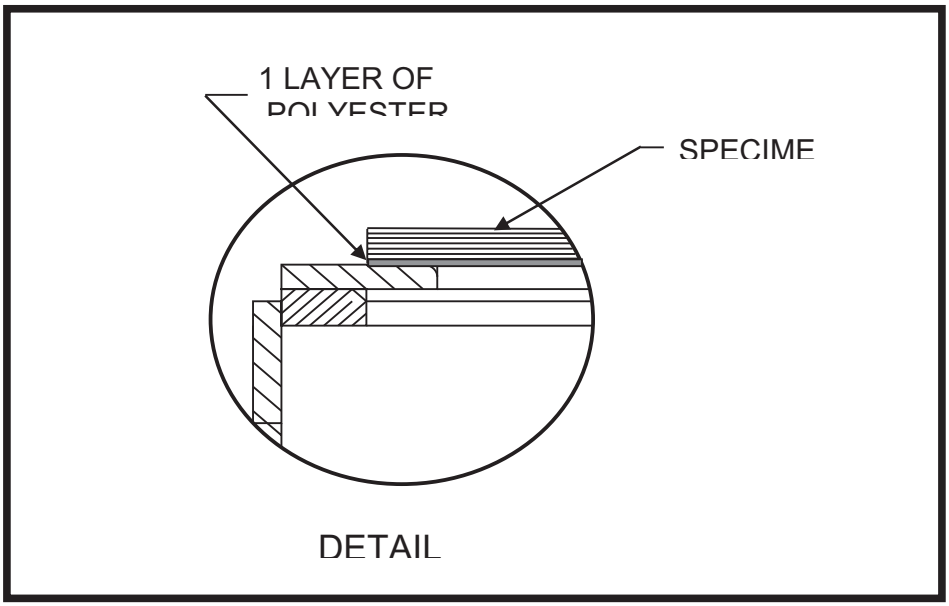

Figure 18: Test Specimen and Plunger: Detail BB from Figure 17

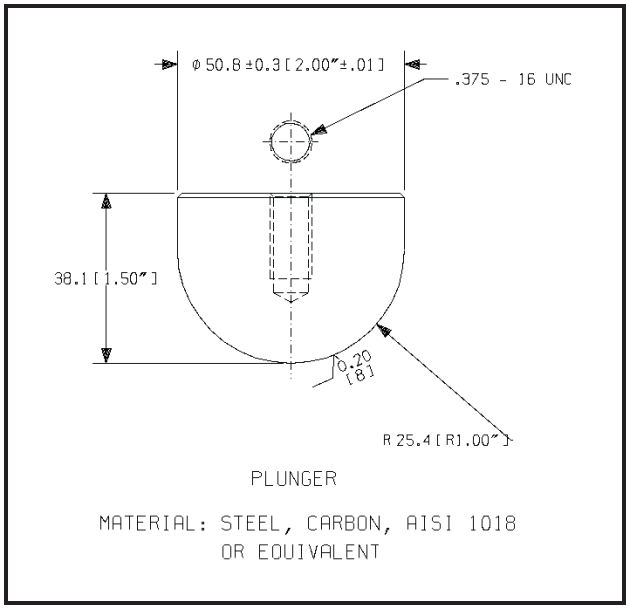

Figure 19: Test Specimen and Plunger:
Test Set-Up: Plunger 1"

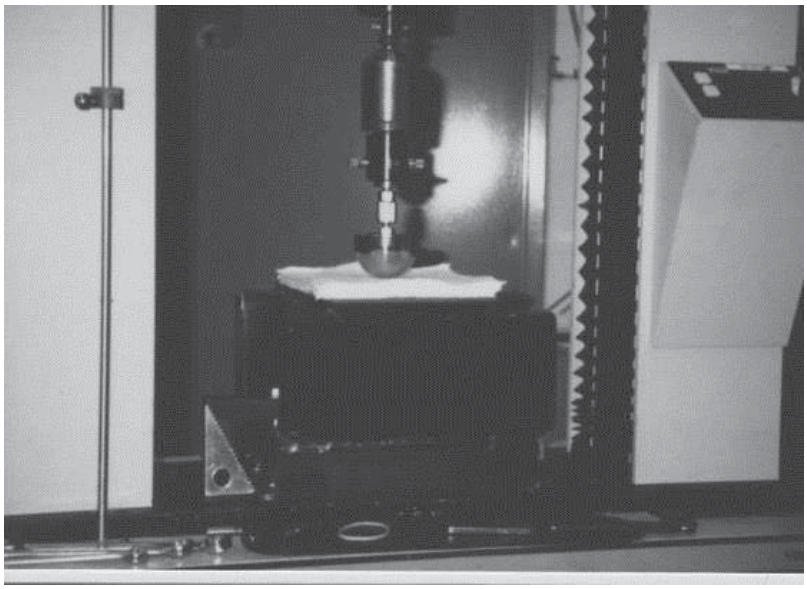

Figure 20: A typical Specimen Under Testing

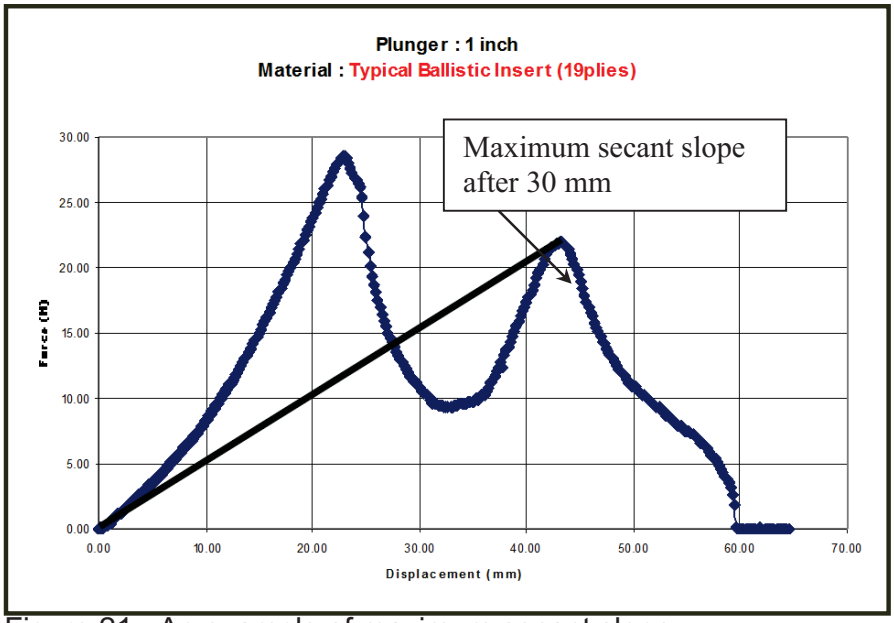

Figure 21: An example of maximum secant slope

ENGLISH NOMENCLATURE

NOMENCLATURE FRANCAISE

NSN 8470-21-XXX-XXXX and BARCODE (Refer to RFP)

NATO SIZE/TAILLE OTAN

Size/Grandeur

MANUFACTURER

CONTRACT -XXXXXXXXXXX- CONTRAT

Figure 22: Identification Labels

WARNING

THIS INSERT PROVIDES PROTECTION AGAINST BOMB, SHELL AND GRENADE FRAGMENTS.

MISE EN GARDE

CE PANNEAU PROTEGERA CONTRE LES ECLATS D'OBUS ET DES GRENADES.

CARE AND CLEANING INSTRUCTIONS	MODE D'ENTRETIEN ET DE NETTOYAGE
REMOVE BALLISTIC INSERTS BEFORE WASHING	**SORTIR LES PANNEAUX BALISTIQUES DE L'ENVELOPPE AVANT DE NETTOYER**
-HAND WASH WITH CLOTH, MILD SOAP AND WATER	-LAVER A LA MAIN AVEC UN TISSU, L'EAU ET LE SAVON DOUX
-DO NOT USE BLEACH	-NE PAS UTILISER DE JAVELISANT
-RINSE WELL TO REMOVE ALL TRACE OF SOAP	-BIEN RINSER POUR ENLEVER TOUTE TRACE DE SAVON
-HANG TO DRY	-ETENDRE MOUILLE
-DO NOT IRON	-NE PAS REPASSER
-DO NOT DRYCLEAN	-NE PAS NETTOYER A SEC
-DO NOT DRY OR STORE IN DIRECT SUNLIGHT	-NE PAS FAIRE SECHER OU ENTREPOSER EN PLEIN SOLEIL

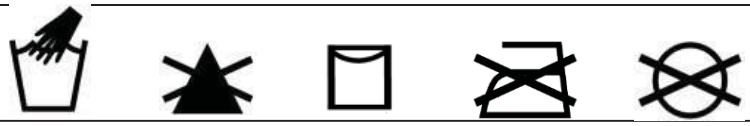

Figure 23: Instruction Label

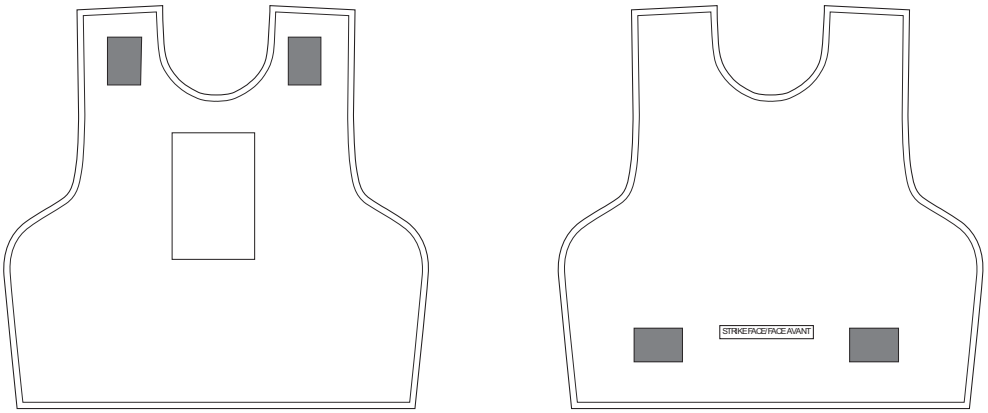

Front Ballistic Panel

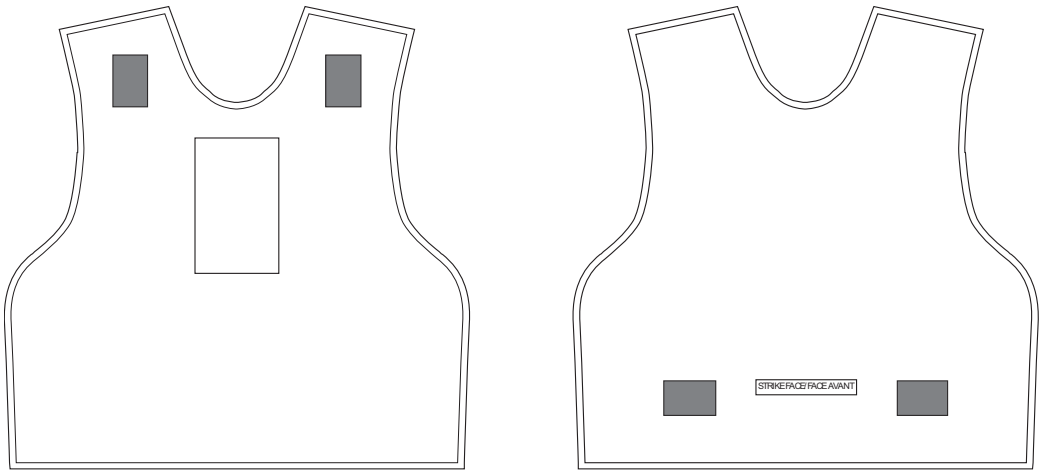

Rear Ballistic Panel

Note: Labels shall be permanently affixed and all printing and markings must be indelible.

Figure 24: Label and Marking Layout

ANNEX C-2

TECHNICAL PURCHASE DESCRIPTION

SNIPER BODY ARMOUR SYSTEM

EXTERNAL CARRIER

Contract Number: W8486-165488

Prepared by:
DSSPM
Technical Authority/Life Cycle Material Manager
National Defence Headquarters
Major General George R. Pearkes Building
Ottawa, Ontario
K1A 0K2

NOTICE

This documentation has been reviewed by the technical authority and does not contain controlled goods. Disclosure notices and handling instructions originally received with the document shall continue to apply.

1 SCOPE AND CLASSIFICATION

1.1 Scope

This document details the technical and performance requirements for the Sniper Body Armor System External Carrier (SBAS EC) rear and front components. These components accept the SBAS BP to become the SBAS EC (Rear) and SBAS EC (Front) assemblies. Together these two assemblies make up the SBAS EC.

The SBAS EC (Rear) and SBAS EC (Front) are shown as items 2 and 4 in Fig.1.

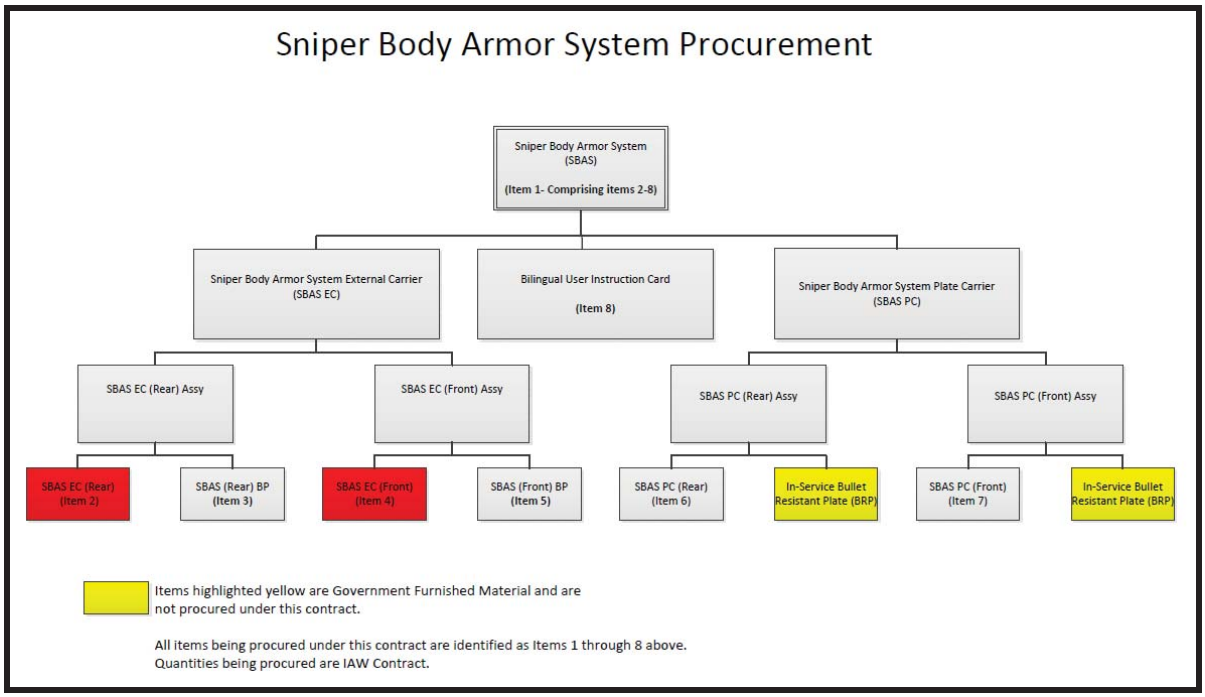

Figure 1: SBAS Procurable Item Hierarchy

1.2 Intended Use

The SBAS provides protection on a 24 hour, global, all-weather continuum to the extent practical. The SBAS provides ballistic protection from fragmenting munitions and debris resulting from high explosive detonation and other explosive devices. Combined with the Bullet Resistant Plates (BRP), this system will optimise the protection levels to defeat multiple ballistic hazards across the battlefield continuum. The SBAS is designed as a two component system composed of an SBAS EC with soft ballistic panels that is worn over the combat shirt and a SBAS PC that can be worn stand alone or over the SBAS EC.

1.3 Terminology

1.3.1 Definitions

1.3.1.1 Girth Measurement

The girth measurement is defined as the maximum horizontal circumference of the chest at the fullest part of the breast measured with a tape.

1.3.1.2 Torso Length (Rear)

The torso length for the SBAS EC (Rear) is defined as surface distance between the cervical landmark on the back of the neck (C7 Vertebrae) to the top of the iliac crest measured with a tape.

1.3.2 Acronyms

Acronym	Description
BRP	Bullet Resistant Plates
CA	Contracting Authority
CGSB	Canadian General Standards Board
DND	Department of National Defence
MIL-DTL	Military Design Specification
IAW	In Accordance With
MIL	Military
SBAS	Sniper Body Armour System
SBAS BP	SBAS Ballistic Panel
SBAS EC	SBAS External Carrier
TA	Technical Authority
TPD	Technical Purchase Description
X-large	Extra Large

2 APPLICABLE DOCUMENTS

2.1 Applicability

The documents listed in section 2 are mandatory, and apply to and form part of this Technical Purchase Description (TPD). The Contractor is responsible for ensuring that it has obtained the most current version of each document. The version of the below identified document in effect at the time of Contract execution applies to and forms part of the TPD. All other document references contained elsewhere are to be considered supplemental information only. The Contractor must bring to the attention of the Contracting Authority (CA) all perceived inconsistencies between the TPD and

referenced documents. In the event of conflict between the content of this TPD and the referenced documents, the content of this TPD must prevail.

2.2 Commercial Standards

2.2.1 A-A 55126 Fastener Tapes, Hook and Loop Synthetic

2.2.2 CAN/CGSB-86.1-M91 Care Labelling of Textiles

2.3 Military Standards

2.3.1 D-80-001-055/SF-001 Label, Clothing and Equipment

2.3.2 MIL-DTL 32439 Cloth, Duck, Textured Nylon

3 REQUIREMENTS

3.1 System Requirements

The SBAS EC forms a component of the SBAS and consists of a front and rear carrier (refer to Fig.1).

3.1.1 Sizes

The SBAS EC must come in five girth sizes to cover the girth range requirement from 32 to 52 inches. The five girth size of the SBAS EC will be referred to as extra-small (x-small), small, medium, large and extra-large (x-large). The girth measurements are made IAW section 1.3.1 definitions.

Each SBAS EC size must come in 3 torso lengths to be known as short, regular and tall. The variation in torso length for the tall and short from the regular torso length must be +/- 1“ respectively. The SBAS EC torso length (Rear) measurements are made IAW section 1.3.1 definitions.

When properly adjusted the overlap of SBAS EC (Rear) and SBAS EC (Front) at the sides should be parallel to each other with 2 to 4 inches of overlap to ensure all-round protection. Less than 2 inches of overlap would mean the SBAS EC is too small for the soldier. More than 4 inches of overlap would mean the SBAS EC is too large for the soldier.

The SBAS EC overall size is to be known by combining the girth size with the torso length (eg Large Tall). This means that 15 distinctive SBAS EC sizes will exist with unique part numbers and corresponding stock codes.

3.1.2 **Labels and Markings**

Labels/marking must be applied to the inner surface of the SBAS EC (Rear) and SBAS EC (Front) IAW section 5.0 and are subject to TA approval.

3.2 **Material Properties**

3.2.1 **Specifications**

Compliance to specifications will be verified by review of submitted certificates of conformance, test reports and by visual inspection.

3.2.2 **Workmanship**

SBAS EC's will be inspected for workmanship and compliance with applicable manufacturing and dimensional requirements defined in Annex C-2.

3.2.3 **Design Features**

The SBAS EC's design is to be based on a standard law enforcement overt/external style carrier. SBAS EC's must meet the following design features:

3.2.3.1 **Material and Colour**

3.2.3.1.1 Outer shell to be manufactured from 500D Cordura™, Coyote 498 in colour IAW MIL-DTL 32439 Type III, Class 2, Style A.

3.2.3.1.2 Component materials must be a matching shade or Coyote 498.

3.2.3.1.3 All hook and loop fasteners are to be IAW A-A 55126 Class 2.

3.2.3.1.4 All materials must have a certificate of conformance from the manufacture of the material provided. Spectral reflectance test data IAW Mil-DTL 32439 must be provided electronically in MS Excel format.

3.2.3.2 **SBAS EC (Front)**

3.2.3.2.1 A minimum 2", maximum 3" wide loop fastener sewn on the outer face of the carrier at each shoulder to engage the shoulder closure.

3.2.3.2.2 4" wide by 6" long loop placed vertically on each side at the waist to engage side closure.

3.2.3.2.3 A bottom opening extending along at least 75 % of the bottom edge of the carrier for ballistic panel insertion/removal. Closure method can be hook and loop or zipper.

3.2.3.2.4 2” x 2” hook or loop fastener sewn into the inside of the carrier at the shoulder to engage the ballistic panel.

3.2.3.3 **SBAS EC (Rear)**

3.2.3.3.1 Back to front style closure with the side closure portion having at least a 3” x 5” vertical hook fastener on the inner surface of the carrier at waist to engage the loop on the SBAS EC (Front).

3.2.3.3.2 A bottom opening extending along at least 75% of the bottom edge of the carrier for ballistic panel insertion/removal. Closure method can be hook and loop or zipper.

3.2.3.3.3 Shoulder portion to have sufficient hook fastener sewn on to provide adjustability and closure to loop on SBAS EC (Front) with at least 2” of engagement.

3.2.3.3.4 2” x 2” hook or loop fastener sewn into the inside of the carrier at the shoulder to engage the ballistic panel.

4 QUALITY ASSURANCE PROVISIONS

4.1 Classification of Inspection

The inspection requirements specified herein are classified as follows:

4.1.1 Pre-production unit inspection; and

4.1.2 Production inspection.

4.2 Pre-production Unit Inspection

Pre-production units will be assessed for compliance to all requirements. 100 % of the units inspected must pass the technical inspection and all TA observations are to be resolved before production starts. If the pre-production units fail the inspection, a second set of pre-production units must be submitted within 15 working days that correct all deficiencies. Rejection by the TA of the second pre-production units submitted by the Contractor for failing to meet the contract requirements will be grounds for termination of the Contract for default.

4.3 Production Inspection

Units will be 100 % inspected by Contractor for material defects, workmanship and dimensional acceptance. The presence of defects (refer to Table 1) or failure to pass testing must be cause for rejection of the production lot. Canada reserves the right to

perform all of the inspections specified herein.

Visual Examination	Defect
External Carriers	Incorrect dimensions of finished carrier components. Incorrect placement of hook and loop components. Unfinished edges, non-conforming seams or stitches. Incorrect colour Incorrect markings. Incorrect pattern orientation. Material defects, cuts, tears, fraying, needle chews, holes or abrasion marks.
Workmanship	Malformed, incorrectly assembled or secured components. Wrongly-sized. Missing components. Incorrect labelling.

Table 1: End Item Examination

4.3.1 **Sub-contractor Obligation**

If the Contractor is not the manufacturer, then his subcontractor must comply with all requirements herein. The Contractor is must provide all specifications and associated documents required for the manufacture of these sub-contract items. The quality of workmanship and conformance to the requirements are the responsibility of the Contractor. The Contractor must provide all necessary data, specifications and inspection documents to DND Quality Assurance Authority when requested.

5 **LABELS**

5.1 **Labels**

All labels for the SBAS EC (Front) and SBAS EC (Rear) must conform to specification D-80-001-055/SF-001 Type I. The label colour must be Light Sand with black lettering for Type 2. Each item will have an Identification Label (refer to Fig. 1) and a Warning/Care and Cleaning Instructions Label (refer to Fig 2).

5.2 **Placement**

Labels must be placed on the body side of the SBAS EC (Front) and SBAS EC (Rear).

ENGLISH NOMENCLATURE

NOMENCLATURE FRANCAISE

NSN 8470-XX-XXX-XXXX
Size/Grandeur
MANUFACTURER

CONTRACT - *XXXXXXXXXXX*- CONTRAT

DND CANADA MDN

Figure 1: Identification Labels

WARNING
CARRIER ALONE DOES NOT PROVIDE ANY BALLISTIC PROTECTION!

ATTENTION

L'ENVELOPPE SEUL NE FOURNIT AUCUNE PROTECTION BALISTIQUE !

CARRIER	**L'ENVELOPPE**
CARE AND CLEANING INSTRUCTIONS	**MODE D'ENTRETIEN ET DE NETTOYAGE**
REMOVE BALLISTIC PLATES BEFORE WASHING	**SORTIR LES PANNEAUX BALISTIQUES DE L'ENVELOPPE AVANT DE NETTOYER**
-MACHINE WASH IN WARM WATER	-LAVER A L'EAU TIEDE A LA MACHINE
-USE MILD LAUNDRY DETERGENT	-UTILISER UN DETERGENT DOUX
-DO NOT USE BLEACH	-NE PAS UTILISER DE JAVELISANT
-TUMBLE DRY ON DELICATE CYCLE OR HANG TO DRY	-SECHER A CYCLE DOUX OU ETENDRE MOUILLE
- DO NOT DRYCLEAN	-NE PAS NETTOYER A SEC
MADE IN CANADA	**FABRIQUE AU CANADA**

Figure 2: Warning/Care and Cleaning Instructions

ANNEX C-3

TECHNICAL PURCHASE DESCRIPTION

SNIPER BODY ARMOUR SYSTEM

PLATE CARRIER

Contract Number: W8486-165488

Prepared by:
DSSPM
Technical Authority/Life Cycle Material Manager
National Defence Headquarters
Major General George R. Pearkes Building
Ottawa, Ontario
K1A 0K2

NOTICE

This documentation has been reviewed by the technical authority and does not contain controlled goods. Disclosure notices and handling instructions originally received with the document shall continue to apply.

1 SCOPE AND CLASSIFICATION

1.1 Scope

This document details the technical and performance requirements for the Sniper Body Armor System Plate Carrier (SBAS PC) rear and front components. These components accept the in-service Bullet Resistant Plate (BRP) to become the SBAS PC (Rear) and SBAS PC (Front) assemblies. Together these two assemblies make up the SBAS PC.

The SBAS PC (Rear) and SBAS PC (Front) are shown as items 6 and 7 in Fig.1.

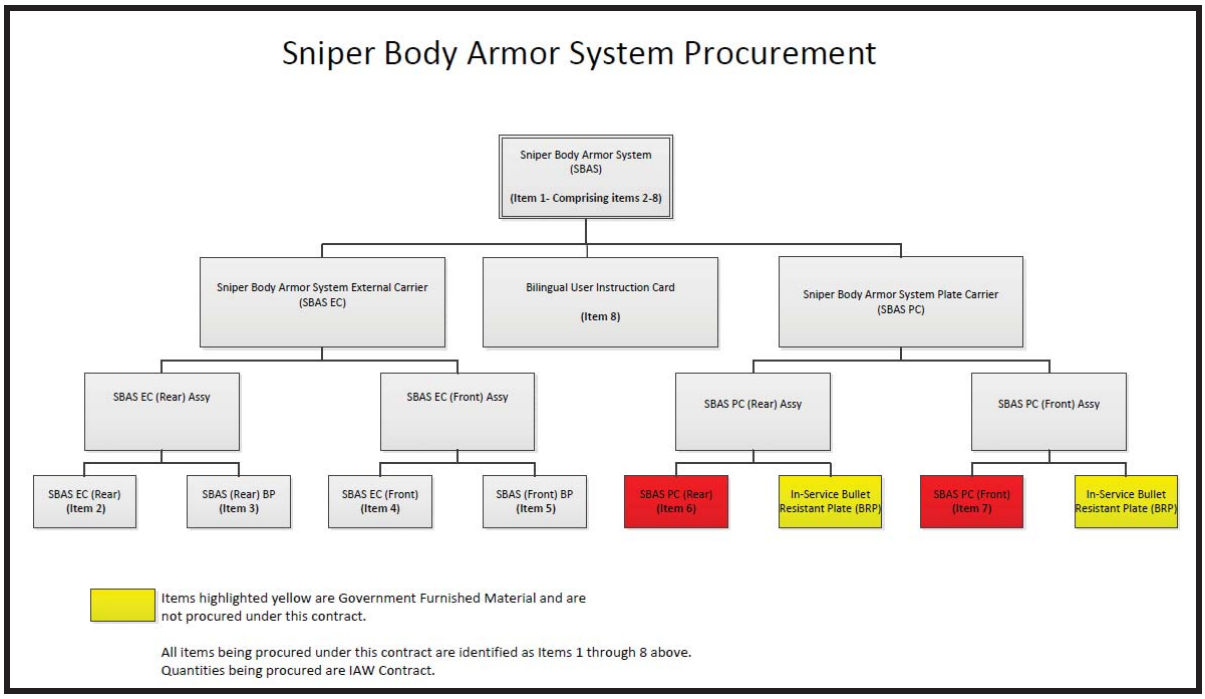

Figure 1: SBAS Procurable Item Hierarchy

1.2 Intended Use

The SBAS provides protection on a 24 hour, global, all-weather continuum to the extent practical. The SBAS provides ballistic protection from fragmenting munitions and debris resulting from high explosive detonation and other explosive devices. Combined with the Bullet Resistant Plates (BRP), this system will optimise the protection levels to defeat multiple ballistic hazards across the battlefield continuum. The SBAS is designed as a two component system composed of an SBAS EC with soft ballistic panels that is worn over the combat shirt and a SBAS PC that can be worn stand alone or over the SBAS EC.

Note: Dimensional data for the BRP is included for interface requirements, but its ballistic performance requirements are not covered by this Technical Purchase Description (TPD).

1.3 Acronyms

1.3.1 Acronyms

Acronym	Description
BRP	Bullet Resistant Plates
CA	Contracting Authority
CGSB	Canadian General Standards Board
MIL-DTL	Military Design Specification
GFM	Government Furnished Material
IAW	In Accordance With
PALS	Pouch and Ladder System
SBAS	Sniper Body Armour System
SBAS PC	SBAS Plate Carrier
TA	Technical Authority
TPD	Technical Purchase Description

2 APPLICABLE DOCUMENTS

2.1 Applicability

The documents listed in section 2 are mandatory, and apply to and form part of this TPD. The Contractor is responsible for ensuring that it has obtained the most current version of each document. The version of the below identified document in effect at the time of Contract execution applies to and forms part of the TPD. All other document references contained elsewhere are to be considered supplemental information only. The Contractor must bring to the attention of the Technical Authority (TA) through the Contracting Authority all perceived inconsistencies between the Technical Purchase Description and referenced documents. In the event of conflict between the content of this TPD and the referenced documents, the content of this TPD must prevail.

2.2 Commercial Standards

2.2.1 A-A-55126 Fastener Tapes, Hook and Loop, Synthetic

2.2.2 CAN/CGSB-86.1-M91 Care Labelling of Textiles

2.3 Military Standards

2.3.1 D-80-001-055/SF-001 Label, Clothing and Equipment

2.3.2 MIL-DTL 32439 Cloth, Duck, Textured Nylon

2.3.3 Mil-W-17337 Webbing, Textile, Woven Nylon

2.4 Engineering Drawings

2.4.1 0078819 Plate Bullet Resistant, Control Drawing

3 REQUIREMENTS

3.1 System Requirements

3.1.1 The SBAS PC forms a component of the SBAS and consists of a front and rear carrier (refer to Fig. 1). The SBAS PC must include the following elements:

3.1.1.1 Front and rear plate carriers.

3.1.1.2 Attached shoulder straps.

3.1.1.3 Attached side straps/cummerbund.

3.1.2 Sizes

The SBAS PC must be a unisex, one size fits all garment covering both male and female, with adjustability to fit Canadian Forces Snipers with girth ranging from 32 to 52 inches. The SBAS PC must fit a soldier with/without wearing the SBAS EC.

3.1.3 Labels and Markings

Labels/marking must be applied to the inner surface of the SBAS PC (Rear) and SBAS PC (Front) IAW section 5 subject to TA approval.

3.1.4 BRP Interface

The BRP pocket in the SBAS PC (Rear) and SBAS PC (Front) must be sized to securely hold the BRP. The pockets must be subjected to 100 % verification during manufacturing utilizing a BRP provided as GFM by DND.

3.2 Material Properties

3.2.1 Specifications

Compliance to specifications must be verified by review of submitted certificates of conformance, test reports and by visual inspection.

3.2.2 Workmanship

SBAS PC’s will be inspected for workmanship and compliance with applicable manufacturing and dimensional requirements defined in Annex C-3.

3.2.3 **Design Features**

The SBAS PC's design must be based on a standard law enforcement overt/external style carrier. SBAS PC's must meet the following design features.

3.2.3.1 **Material and Colour**

3.2.3.1.1 Outer shell to be manufactured from 500D Cordura™, Coyote 498 in colour accordance with MIL-DTL 32439 Type III, Class 2, Style A.

3.2.3.1.2 Component materials must be a matching shade or Coyote 498.

3.2.3.1.3 All hook and loop fastener IAW A-A-55126 Class 2.

3.2.3.1.4 All materials must have a certificate of conformance from the manufacture of the material provided. Spectral reflectance test data IAW Mil-DTL 32439 must be provided electronically in MS Excel format.

3.2.3.2 **SBAS PC (Front)**

3.2.3.2.1 Two rows of Pouch and Ladder System (PALS) with the first row situated 1" down from top of carrier on the outer face. 1" spacing between the two rows with 1.5" spacing between vertical stitch applications.

3.2.3.2.2 Two female 1" quick release buckles located vertically between the two rows of PALS situated on outer edge of PALS (i.e. not between rows) with opening of buckles oriented down.

3.2.3.2.3 Buckles must be positioned with a centre to centre measurement of 7.5" +/- 1/8".

3.2.3.2.4 4" wide loop sewn across bottom, outer face of carrier extending up from bottom edge of carrier.

3.2.3.2.5 Cordura™ flap with 4" wide hook fastener on inner surface, sewn on to form a protective closure over 4" loop on front of carrier.

3.2.3.2.6 Plate pocket closure flap at bottom of carrier to wrap inwards towards body at least 3" with at least 2" hook and loop closure.

3.2.3.3 **SBAS PC (Rear)**

3.2.3.3.1 Plate pocket closure flap at bottom of carrier to wrap inwards towards body at least 3" with at least 2" hook and loop closure.

3.2.3.3.2 No PALS on rear carrier.

3.2.3.4 **Shoulder Straps**

3.2.3.4.1 2” wide webbing IAW Mil-W-17337 Class 2 sewn and bartacked into rear carrier material with at least 1” depth into fabric.

3.2.3.4.2 Straps to have hook and loop sewn on along entire length of strap to provide maximum adjustability and closure.

3.2.3.4.3 Use of plastic loops is optional for adjustability.

3.2.3.4.4 Straps must be positioned so that they angle away from the neck.

3.2.3.5 **Side Straps/ Cummerbund**

3.2.3.5.1 Straps to be between 3” and 4” wide, sewn and bar tacked into rear carrier with at least 1” depth into rear carrier fabric, aligned with loop on front carrier.

3.2.3.5.2 Front end of strap to have hook fastener sewn on inner surface to provide sufficient closure and allow for one size fitting.

3.2.3.5.3 Straps to have 4” of loop fastener on the outer surface of the forward edge of the strap in order to allow the front carrier flap hook fastener to engage when closed.

4 QUALITY ASSURANCE PROVISIONS

4.1 Classification of Inspection.

The inspection requirements specified herein are classified as follows:

4.1.1 Pre-production unit inspection; and

4.1.2 Production inspection.

4.2 Pre-production Unit Inspection

Pre-production units will be assessed for compliance to all requirements. 100 % of the units inspected must pass the technical inspection and all TA observations are to be resolved before production starts. If the pre-production units fail the inspection, a second set of pre-production units must be submitted within 15 working days that correct all deficiencies. Rejection by the TA of the second pre-production units submitted by the Contractor for failing to meet the contract requirements will be grounds for termination of the Contract for default.

4.3 Production Inspection

Plate Carriers must be 100 % inspected by Contractor for material defects, workmanship and dimensional acceptance. The presence of defects (refer to Table 1)

or failure to pass testing must be cause for rejection of the production lot. Canada reserves the right to perform all of the inspections specified herein.

Visual Examination	Defect
Carrier shell and straps	Incorrect Plate pocket dimensions, construction, or location. (100% Verification with GFE furnished BRP) Incorrect dimensions. Incorrect placement of hook and loop components Unfinished edges, non-conforming seams or stitches. Incorrect colour Incorrect markings. Incorrect pattern orientation. Material defects, cuts, tears, fraying, needle chews, holes or abrasion marks.
Workmanship	Malformed, incorrectly assembled or secured components. Wrongly-sized or missing components Incorrect labelling.

Table 1: End Item Examination

4.3.1 Sub-Contractor Obligation

If the Contractor is not the manufacturer, then his subcontractor must comply with all requirements herein. The Contractor is required to provide all specifications and associated documents required for the manufacture of these sub-contract items. The quality of workmanship and conformance to the requirements are the responsibility of the Contractor. The Contractor is required to provide all necessary data, specifications and inspection documents to DND Quality Assurance Authority when requested.

5 LABELS

5.1 Labels

All labels for the SBAS PC (Front) and SBAS PC (Rear) must conform to specification D-80-001-055/SF-001 Type I. The label colour must be Light Sand with black lettering for Type 2. Each item must have an Identification Label (refer to Fig. 1) and a Warning/Care and Cleaning Instructions Label (refer to Fig 2).

5.2 Placement

Labels must be placed on the body side of the SBAS PC (Front) and SBAS PC (Rear).

PLATE CARRIER

SUPPORT de PLAQUE

NSN 8470-XX-XXX-XXXX
One Size/Un Taille
MANUFACTURER

CONTRACT - *XXXXXXXXXXX*- CONTRAT

DND CANADA MDN

Figure 1: Identification Labels

WARNING
PLATE CARRIER ALONE DOES NOT PROVIDE ANY BALLISTIC PROTECTION!

ATTENTION
L'ENVELOPPE SEUL NE FOURNIT AUCUNE PROTECTION BALISTIQUE !

CARRIER	**L'ENVELOPPE**
CARE AND CLEANING INSTRUCTIONS	**MODE D'ENTRETIEN ET DE NETTOYAGE**
REMOVE BALLISTIC PLATES BEFORE WASHING	**SORTIR LES PLAQUES BALISTIQUES DE L'ENVELOPPE AVANT DE NETTOYER**
-MACHINE WASH IN WARM WATER	-LAVER A L'EAU TIEDE A LA MACHINE
-USE MILD LAUNDRY DETERGENT	-UTILISER UN DETERGENT DOUX
-DO NOT USE BLEACH	-NE PAS UTILISER DE JAVELISANT
-TUMBLE DRY ON DELICATE CYCLE OR HANG TO DRY	-SECHER A CYCLE DOUX OU ETENDRE MOUILLE
- DO NOT DRYCLEAN	-NE PAS NETTOYER A SEC
MADE IN CANADA	**FABRIQUE AU CANADA**

Figure 2: Warning/Care and Cleaning Instructions

ANNEX D

TECHNICAL EVALUATION REQUIREMENTS

SNIPER BODY ARMOUR SYSTEM

BIDDERS INSTRUCTIONS

Requisition Number: W8476-165488

Prepared by:
DSSPM
Technical Authority/Life Cycle Material Manager
National Defence Headquarters
Major General George R. Pearkes Building
Ottawa, Ontario
K1A 0K2

NOTICE

This documentation has been reviewed by the technical authority and does not contain controlled goods. Disclosure notices and handling instructions originally received with the document shall continue to apply.

1 Scope and Classification

1.1 Scope

This document identifies the evaluation elements used to score Sniper Body Armour System (SBAS) bid submissions including requirements for test coupons, test data, pre-award samples, written proposals and follow on DND testing that will occur to support the evaluation of the bidder's proposal.

Bidders must provide all the coupons, test data, pre-award sample and written proposal with their bid, at bid closing. Bidders must include all items with their bid as defined in Section 3 of this document for all 5 Phases of the evaluation, otherwise the bid submission will be deemed to be non-compliant.

1.2 Acronyms

Acronym	Description
AATCC	American Association of Textile Chemists and Colorists
ASTM	American Society of the International Association for Testing and Materials
BRP	Bullet Resistant Plates
CA	Contracting Authority
C of C	Certificate of Conformance
CGSB	Canadian General Standards Board
DND	Department of National Defence
FR	Flame Retardant
FMJ	Full Metal Jacket
FSP	Fragmentation Simulating Projectile
GFM	Government Furnished Material
gr	grain
IAW	In Accordance With
MTL-DTL	Military Design Specification
NATO	North Atlantic Treaty Organization
PAS	Pre Award Sample
PSPC	Public Services and Procurement Canada
QA	Quality Assurance
RVM	Requirements Verification Matrix
SBAS	Sniper Body Armour System
SBAS EC	SBAS External Carrier
SBAS PC	SBAS Plate Carrier
Sph	Sphere
TA	Technical Authority

Acronym	Description
TPD	Technical Purchase Description
TPP	Total Points Possible

2 Applicable Documents

2.1 Technical Evaluation Workbook, Appendix 1 to Annex D.

3 Overview

The SBAS bidder evaluation will occur in 5 phases with a bidder's overall compliance being determined at the end of each phase. Only bids assessed as being fully compliant at the end of a phase will proceed to the next phase of bid evaluation.

The successful bidder will be selected from amongst the bidders that are assessed as being fully compliant in all five phases of the bid evaluation.

The evaluation phases are summarized as follows:

3.1 Phase 1

The bidder's proposal will be assessed against all mandatory requirements detailed in the Technical Evaluation Workbook which is attached as Appendix 1 to Annex D. The bidder proposal must demonstrate that it meets all mandatory requirements to be compliant. Details can be found in Section 4 to Annex D.

3.2 Phase 2

The bidder's draft QA/Management Plan must achieve a minimum score of 49 out of a total possible 61 points to be compliant. Details can be found in Section 5 of Annex D.

3.3 Phase 3

The bidder's SBAS Construction and Design must achieve a minimum score of 18 out of a total possible 23 points to be compliant. Details can be found in Section 6 of Annex D.

3.4 Phase 4

The bidder's non-ballistic materials will be assessed against the spectral reflectance and test requirements defined in MIL-DTL 32439. The bidder's non-ballistic materials must meet all requirements to be compliant. Details can be found in Section 7 of Annex D.

3.5 Phase 5

Ballistic Qualification will be scored by reviewing the Ballistic Qualification Test Reports submitted by the bidder. DND will also conduct Ballistic Qualification testing of bidder ballistic shoot packs. The bidder must meet all minimum mandatory scores and achieve a minimum overall assessed score of 210 out of a total possible 700 points to be compliant. Details can be found in Section 8 of Annex D.

4 Phase 1 Technical Workbook Evaluation

4.1 To support evaluation the bidder must submit 1 x SBAS (PAS) Medium Regular in size consisting of a complete Sniper Body Armor System (SBAS) that is shown as Item 1 in Figure 1 (less Item 8) with the bid.

4.2 The SBAS (PAS) must meet all the requirements of the Technical Purchase Descriptions (TPD) contained in Annexes C-1 Purchase Description Ballistic Plates, C-2 Purchase Description External Carrier and C-3 Purchase Description Plate Carrier.

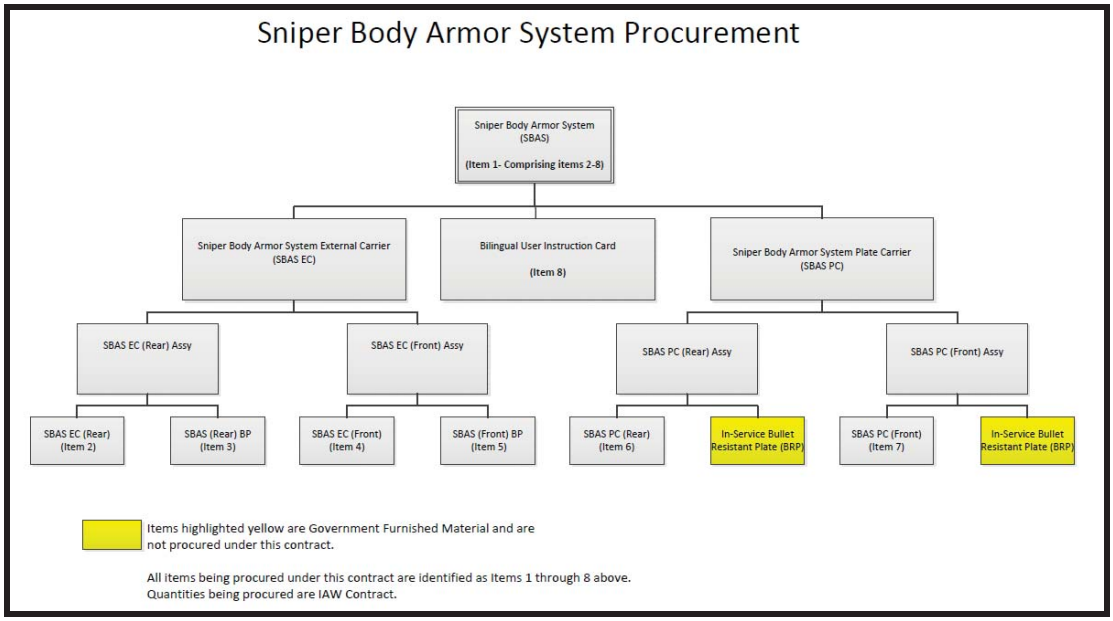

Figure 1: SBAS Procurable Items Hierarchy

4.3 The bidder must submit with the bid a recommended torso back length dimension for each of the 15 SBAS (Annex C-2 Section 3.1.1 refers) to be procured.

The Technical Evaluation Workbook located at Appendix 1 to Annex D contains 4 tabs that correspond to the key mandatory requirements found in Annex C-1 Technical Purchase Description Ballistic Plates, Annex C-2 Technical Purchase

Description External Carrier, Annex C-3 Technical Purchase Description Plate Carrier and Annex D Bidders Guidance that will be evaluated during bid evaluation.

Failure of a bidder to be deemed compliant to all key mandatory requirements will render the bid non-compliant and it will not proceed to Phase 2 bid evaluation. To facilitate the evaluation of a bid the bidder should complete the following columns:

4.4 Column 5 "Bidder's Self-Assessment"

This column is a bidder's self-assessment column where a bidder is able to indicate whether he is compliant to each mandatory requirement being evaluated. Each cell contains a drop down menu with two choices from which the bidder should choose either "compliant" or "non-compliant".

4.5 Column 6 "Evidence Location in Bid Package"

In this column the bidder should clearly identify where in the bid binder (document, page, paragraph) the evaluator can find the information which supports the bidder's compliance against the mandatory requirement.

4.6 Columns 7 " Bidder's Statement and/or Comments"

In this column the bidder should provide any additional relevant information that they would like to bring to the attention of the evaluator for consideration during his assessment of each of the mandatory requirements.

5 Phase 2 QA Management Plan Evaluation

5.1 Quality Assurance (QA)/Management Plan

The Bidder must submit a comprehensive draft QA/Management Plan that details all the QA processes that will be followed for the SBAS procurement contract.

The QA/Management Plan will be scored IAW with Table 2. Points will be awarded based on the level of detail and relevancy of information provided by the bidder to addresses each topic. If sub-contractors are utilized in the production /manufacturing of the SBAS or components there must be a clear indication of responsibility and linkages with the bidder's processes.

Bidders must achieve a minimum score of 49 points out of a total possible 61. Bidders scoring less than 49 points will result in the bid being considered non-compliant and will not proceed to Phase 3 bid evaluation.

The final QA/Management Plan will be delivered to the TA under contract.

The QA/Management Plan must address the following topics:

5.1.1 Design Processes;

5.1.2 Lot Control and Traceability Processes;

5.1.3 Testing Programs (must indicate laboratory/facilities used);

5.1.4 Production Control Processes;

5.1.5 Inspection Processes (including raw material, in process and post manufacturing);

5.1.6 Purchasing (must indicate suppliers);

5.1.7 Training Processes;

5.1.8 Project Management Processes (must name Project Manager)

5.1.9 Contract Schedule.

Table 2: QA/Management Plan Evaluation

Topic Area	Not Discussed	Incomplete Information	Comprehensive Discussion	Max Score
Design Processes				**8**
Describe design review control	0	2	4	
Describe design approval process	0	2	4	
Lot Control and Traceability				**16**
Describe steps taken to receipt and store armour material	0	2	4	
Describe lot segregation and control	0	4	6	
Describe lot traceability to finished good	0	4	6	
Testing Programs				**12**
Identify ballistic test facilities	N/A	N/A	4	
Lot number identified on test report	N/A	N/A	4	
Material testing non-ballistic materials	0	2	4	
Production Control Processes				**4**
Describe production control points to ensure SBAS meets requirements	0	2	4	
Inspection Processes				**4**

Topic Area	Not Discussed	Incomplete Information	Comprehensive Discussion	Max Score
Identify inspection points in SBAS production flow including incoming, in-process and final	0	2	4	
Purchasing				**6**
Identify all SBAS suppliers and sub-contractors	0	1	3	
Identify purchasing control points relevant to SBAS	0	1	3	
Training Processes				**3**
Identify how staff will be trained on SBAS testing, production and inspection	0	1	3	
Project Management Processes				**4**
Identify overall project management authority	N/A	N/A	2	
Describe Project Management Processes that will be followed with the SBAS procurement.	N/A	N/A	2	
Production Schedule				**4**
Project schedule detailing major activities from contract award to deliverable of last deliverable	N/A	N/A	4	
Note: 1/2 points may be awarded up to maximum assigned point value. For example a bidder could achieve a score of 2.5 out of 3 for "Identify all SBAS suppliers and sub-contractors."				
Rating Definitions				
Not Discussed: Requested information is not in the QA/Management Plan.				
Incomplete Information: The bidder provides limited or incomplete information on the topic. The bidder does not provide adequate supporting information or provided contradictory information.				
Comprehensive Discussion: The bidder provides thorough and comprehensive information including supporting documentation on the topic clearly explaining how it applies to SBAS procurement.				

6 Phase 3 Construction and Design Technical Evaluation

Each SBAS (PAS) will be evaluated for the presence of construction and workmanship defects IAW Table 1 of Annex's C-2 and C-3.

Bidders must achieve a minimum score of 18 out of a total possible 23 points to be compliant. Bidders scoring less than 18 points will result in the bid being considered non-compliant and will not proceed to Phase 4 bid evaluation.

Construction and Design Technical Evaluation				
Item	Requirement	Points Deducted For Each Deficiency	Total Points Possible (TPP)	Bidder Score
Ballistic Panels	Is there ballistic material caught in seams?	1	2	

Construction and Design Technical Evaluation				
Item	Requirement	Points Deducted For Each Deficiency	Total Points Possible (TPP)	Bidder Score
	Is the shoulder attachment system in place and evenly positioned?	1	2	
	Is the hook and loop attachments on ballistic packs properly aligned with the carriers to ensure sufficient attachment?	1	4	
	Is the ballistic material flat, smooth and secure?	1	2	
Labels	Are all labels securely attached to front and rear ballistic panels, external and plate carriers?	1	6	
SBAS EC and SBAS PC	Are there consistent stitches per inch throughout external and plate carrier?	1	4	
	Are all drill holes covered?	1	1	
	Is there fraying or other material damage evident?	1	1	
	Are bartacks of consistent length?	1	1	
Table 1: Construction and Design		TPP	23	
		Bidders Score		
		Pass 18 or Higher		

7 Phase 4 Non-Ballistic Materials Evaluation

In this phase non-ballistic materials used by the bidder in the manufacture of the SBAS will be assessed against the detailed requirements of MIL-DTL 32439.

7.1 Non-Ballistic Materials Evaluation

7.1.1 Carrier Material Spectral Reflectance Values

The bidder must provide the spectral reflectance values for the carrier material used in the SBAS EC and SBAS PC (500D Cordura™, Coyote 498 in colour, Type III, Class 2, Style A) IAW MIL-DTL 32439. The spectral reflectance values must be submitted electronically in MS Excel format on a USB stick. The spectral reflectance values provided must be supported by an independent test report from an accredited laboratory specializing in textile testing.

DND will evaluate the spectral reflectance values submitted against those in Table II in MIL-DTL-32439. Material with spectral reflectance values between and including the stated "Min" and "Max" for each wave-length data point will be considered compliant (refer to Fig. 2). Bidders who have any spectral reflectance values outside the stated "Min" and "Max" values will result in the bid being considered non-compliant and it will not proceed to Phase 5 bid evaluation.

TABLE II. Spectral reflectance (percent), Style A.

Solid Shades														
Wave-length (nano nometers)	Camouflage Green 483		Foliage Green 504		Urban Gray 505		Coyote 498		Coyote Brown 3758		Tan 380		Tan 499	
	Min	Max	Min	Max	Min	Max	Min	Max	Min	Max	Min	Max	Min	Max
600	3	10	8	26	12	26	8	20	8	20	N/A	N/A	8	26
620	3	10	8	26	14	26	8	20	8	20	N/A	N/A	8	26
640	3	10	8	28	14	28	8	22	8	22	N/A	N/A	8	30
660	3	11	10	30	14	30	8	24	8	26	N/A	N/A	8	34
680	3	13	10	34	18	34	12	24	10	27	N/A	N/A	12	38
700	4	28	12	38	24	38	12	34	12	53	25	53	12	40
720	5	40	16	42	26	42	16	42	16	54	25	54	16	46
740	7	52	16	46	30	46	22	46	20	55	25	55	22	50
760	11	60	18	48	32	48	30	50	21	56	26	56	30	50
780	17	64	18	48	34	48	34	54	21	57	27	57	34	54
800	24	67	20	50	34	50	36	56	22	58	28	58	36	56
820	32	70	22	54	36	54	38	58	23	59	30	59	38	58
840	37	71	24	54	38	54	38	58	24	62	33	62	38	58
860	40	73	26	56	40	56	40	60	25	65	36	65	40	60

Figure 2: Spectral Reflectance Values

7.1.2 Carrier Material Test Compliance

The carrier material (500D Cordura™, Coyote 498 in colour, Type III, Class 2, Style A) used in the SBAS EC and SBAS PC must meet all the test requirements defined in MIL-DTL-32439. The specific requirements that will be evaluated are as follows:

7.1.2.1 Colorfastness Requirements

The bidder must submit a test report from an accredited laboratory specializing in textile testing that demonstrates that the materials used in the SBAS meet the colorfastness requirements IAW Table I from Mil-DTL 32439 (Figure 3 refers). Failure of a bidder to demonstrate compliance in the test report(s) will render the bid non-compliant and the bidder will not proceed to Phase 5 in the bid evaluation process.

Style	Color Evaluation	Laundering (3 cycles) 1/ (min.)	Light (40 hrs or 170 kJ 2/ (min.)	Perspiration (Acid & Alkaline) 1/ (min.)	Crocking 3/ (min.)	Accelerated weathering (80 hrs.) 2/ (min.)	Frosting (Carbon Black) 2/ (min.)
"A" Solid Shade	All colors	3-4	3-4	3-4	3.5	3-4	N/A

Figure 3: Colorfastness Requirements

7.1.2.2 Physical Requirements

The bidder must submit a test report from an accredited laboratory specializing in textile testing that demonstrates that the materials used in the SBAS meet the physical requirements IAW Table X from Mil-DTL 32439 (Figure 4 refers). Failure of a bidder to demonstrate compliance in the test report(s) will render the bid non-compliant and it will not proceed to Phase 5 bid evaluation.

Characteristic	Weight (oz/sq yd)		Yarns per inch (min.)		Breaking strength lbs (min.)		Air permeability (cu.ft/min./sq.ft) (max)
	Min	Max	Warp	Filling	Warp	Filling	
Type I Classes 1 and 2	8.5	9.5	35	28	500	300	10 1/
Type I Class 3	11.0	12.0	35	28	500	300	N/A
Type I Class 4	11.0	12.0	35	28	500	300	N/A
Type II Classes 1 and 2	6.5	7.5	41	36	450	280	N/A
Type II Class 3	9.0	10	41	36	450	280	N/A
Type III Classes 1 and 2	6.0	7.0	48	35	275	200	N/A

Figure 4: Physical Requirements

7.1.2.3 End Item Test Requirements

The bidder must submit a test report(s) from an accredited laboratory specializing in textile testing that demonstrates that the materials used in the SBAS meet the physical requirements IAW Table XI from Mil-DTL 32439 (Figures 5 and 6 refer).

Failure to demonstrate compliance in the test report(s) will render the bid non-compliant and it will not proceed to Phase 5 bid evaluation.

Characteristic	Requirement Paragraph	Test Method
Yarn:		
Fiber identification	3.4.1	AATCC-20 or ASTM D 276
Yarn denier	3.4.1.1	ASTM D 1907
Visual shade matching	3.5.8	AATCC Evaluation Procedure 9, Option A 1/
Colorfastness to:		
Laundering (after 3 cycles)	3.5.9	AATCC 61, Test 1A
Light (after 40hrs. or 170 kJ)	3.5.9	AATCC 16, Option 1or 3
Perspiration (acid & alkaline)	3.5.9	AATCC 15
Crocking	3.5.9	AATCC 8
Accelerated Weathering (after 80 hrs.) (Style A only)	3.5.9	AATCC 169 Option 3
Frosting (carbon black only) (300 cycles)	3.5.9	AATCC 119
Spectral reflectance	3.7	4.5.1
Weight	3.8	ASTM D 3776, Option C
Yarns per inch	3.8	ASTM D 3775
Breaking strength	3.8	ASTM D 5034
Air permeability (Type I Class 1 only)	3.8	ASTM D 737
Tear strength: (Type IV Class 2)	3.8.1	ASTM D 1424
Puncture propagation tear strength (Type IV Class 3)	3.8.1.1	ASTM D 2582
Abrasion Resistance	3.8.2	ASTM D 3884 2/
Weave	3.8.3	Visual
Spray rating (All Types Classes 2, 3 and 4):		
Initial	3.9.1.1	AATCC 22
(All Types Classes 3 (and 4 if FR coated):	3.9.1.1	
After one laundering		AATCC 96 Test VIc,A,0 and AATCC 22
Hydrostatic resistance (Types I, II and III Classes 3 (and 4 if FR coated)	3.9.1.2	AATCC 127 or ASTM D 751, 3/ 4/
Dynamic absorption: (All Types Classes 3 (and 4 if FR coated)		
Initial	3.9.1.3	AATCC 70
After 1 laundering	3.9.1.3	AATCC 96, Test VIc,A,0 and AATCC 70

Figure 5: End Item Test Requirements

Characteristic	Requirement Paragraph	Test Method
Blocking (All Types, Classes 3 and 4)	3.9.3	ASTM D 751, and 4.5.2
Resistance to organic liquid: (All Types Classes, 2, 3 and 4) Initial After one laundering	 3.9.4 3.9.4	 AATCC 118 5/ AATCC 96, Test VIc,A,0 and AATCC 118
Resistance to Diethyltoluamide (DEET)	3.9.5	4.5.3
Resistance to low temperature (All Types, Classes 3 and 4)	 3.9.6	 4.5.4
Resistance to high humidity	3.9.7	4.5.5
Stiffness: (Types I, II and III Classes 3 and 4) (Type IV, Class 3 (Army) (Type IV, Class 3 (Marine Corp)	 3.9.8 3.9.8 3.9.8	 ASTM D 747 ASTM D 747 4.5.6
Flame resistance Initial After 5 launderings	 3.9.9 3.9.9	 ASTM D 6413 6/ AATCC 135, 3,III,Aiii and ASTM D 6413 6/
pH	3.10	AATCC 81
Dimensional stability(after 1 cycle)	3.11	AATCC 96, Test VIc,A,0
Toxicity	3.16	4.5.7

Figure 6: End Item Test Requirements

7.1.3 **Miscellaneous Non-Ballistic Fabrics**

A Certificate of Conformance (C of C) must be provided by the manufacturer for fabrics (items 7.1.3.1 to 7.1.3.3 refer) used in the manufacturing of the SBAS. The C of C must indicate compliance to the applicable specifications listed in paras 7.1.3.1 to 7.1.3.3. Failure of a bidder to submit a C of C will render the bid non-compliant and it will not proceed to Phase 5 bid evaluation.

7.1.3.1 Fastener Tapes, Hook and Loop IAW Commercial Item Description A-A-55126 Class 2.

7.1.3.2 Label, Clothing and Equipment to specification D-80-001-055/SF-001.

7.1.3.3 Webbing, Textile Woven Nylon to Mil-W-17337

8 **Phase 5 Ballistic Qualification Evaluation**

8.1 **Overview**

The Bidder must deliver with each proposal 16 ballistic shoot-packs (400 mm x 400 mm) and 10 armour material-packs (152mm x 152mm). These items will be used by the TA to conduct its own ballistic qualification testing as part of the bid evaluation.

The bidder must provide a C of C attesting that both bidder and TA ballistic shoot packs and armour material packs are manufactured from the same material lots.

8.2 Bidders Ballistic Material Qualification Testing

The bidder must produce and test 16 ballistic shoot-packs and 10 armour material-packs IAW Table 3 Bidder Testing.

The bidder must submit Test report (s) for each test referenced in Table 3 and must incorporate all information as detailed in Annex C-1 Section 6.8.

If a bidder is proposing multiple ballistic solutions for evaluation then 16 shoot-packs for the second solution must also be submitted with their proposals and must include bidder test results for each solution.

Reference		BIDDER TEST REQUIREMENT	Quantity of Samples/Solution
Annex C-1	4.2	V_{50} 17 gr NATO FSP	3 shoot-packs
Annex C-1	4.3	V_{50} (Wet Test) 16 gr Large Sphere	3 shoot-packs
Annex C-1	4.4	V_{50} 64 gr RCC	6 shoot-packs
Annex C-1	4.5	V_{50} 1 gr Small Sphere	3 shoot-packs
Annex C-1	4.6	*VProof 9 mm FMJ Backface*	1 shoot-pack
Annex C-1	3.4-3.6	Armour Characteristics	10 armour-packs
Annex C-1	3.7	Panel Water Absorption	**(Note 1)**

Table 3: Bidder Testing

Note 1: Same shoot-packs used in the V_{50} (Wet Test) 16 gr Large Sphere can be used for this result.

8.3 TA Ballistic Material Qualification Testing

The TA will perform ballistic material qualification testing IAW Table 4 Canada Testing, on the ballistic shoot-packs and armour material-packs described in Annex D Section 8.1.

Reference		TA TEST REQUIREMENTS	Quantity of Shoot-packs
Annex C-1	4.2	V_{50} 17 gr NATO FSP	3 shoot-packs
Annex C-1	4.3	V_{50} (Wet Test) 16 gr Large Sphere	3 shoot-packs
Annex C-1		V_{50} (Dry) 16 gr Large Sphere	3 shoot-packs
Annex C-1	4.5	V_{50} 1 gr Small Sphere	3 shoot-packs
Annex C-1	4.6	*VProof 9 mm FMJ Backface*	1 shoot-pack
			3 spare

Table 4: 8.3 TA Ballistic Material Qualification Testing

8.4 Ballistic Qualification Testing Scoring

Ballistic qualification is scored with a mandatory minimum requirement for each test.

To be compliant the bidder's ballistic solutions will be assessed against the mandatory minimum requirement for each test. If it is determined that a bidders' proposal fails to meet one or more of the mandatory minimum requirements, the bid will be considered to be non-compliant and no further testing scoring will occur.

If a bidder's ballistic solution is deemed to meet all mandatory minimum requirements it will be scored by allocating points based on the values found in Table 5 Ballistic Testing Scoring Grid for each specific test. For the purposes of scoring ballistic qualification tests the evaluator will round the velocity found in the submitted test report to the closest whole number. For example a V_{50} 17 g FSP velocity of 508.50 m/s would be rounded up to 509 m/s and receive a score of 9 points whereas a V_{50} 17 g FSP velocity of 508.49 m/s would be rounded down to 508 m/s and receive a score of 8 points. In the case of VProof Backface Deformation data will be rounded to one decimal place and in the case of Areal Density data will be rounded to two decimal places before score allocation.

Results used for final scoring assigned to a specific test will be based on the combined average of Bidder and TA test data, provided bidder test data is within ± 5 % of TA test results. Otherwise only TA test results will be used.

Where the TA does not conduct a specific test the bidder's test results will be used to determine the score for this test.

Where the bidder does not conduct a specific test the TA's test results will be used to determine the score for this test.

To be compliant the bidder must achieve a minimum score of 210 out of a total possible 700 points.

The bidder's scored results from the V_{50} tests will be used to form the V_{50} values for Contract Award (V_{50}ca) for each threat.

V_{50} 17 g FSP (m/s)	Points	V_{50} 1 g Sph (m/s)	Points	V_{50} 64 g RCC (m/s)	Points	V_{50} 16 g Wet (m/s)	Points	V_{50} 16 g Dry (m/s)	Points	Backface Deformation (mm) VProof	Points	Areal Density (Kg/m$^{2)}$	Points
Raw Data		Raw Data		Raw Data		Raw Data		Raw Data		Raw Data		Raw Data	
≤ 500	Fail	≤ 525	Fail	≤ 350	Fail	≤ 415	Fail	≤ 455	Fail	> 50	Fail	> 3.25	Fail
501-505	1-5	526-530	1-5	351-355	1-5	416-420	1-5	456-460	1-5	48.1-50	0	3.24-3.25	0
506-510	6-10	531-535	6-10	356-360	6-10	421-425	6-10	461-465	6-10	46.1-48	5	3.22-3.23	5
511-515	11-15	536-540	11-15	361-365	11-15	426-430	11-15	466-470	11-15	44.1-46	10	3.19-3.21	10
516-520	16-20	541-545	16-20	366-370	16-20	431-435	16-20	471-475	16-20	42.1-44	15	3.16-3.18	15
521-525	21-25	546-550	21-25	371-375	21-25	436-440	21-25	476-480	21-25	40.1-42	20	3.13-3.15	20
526-530	26-30	551-555	26-30	376-380	26-30	441-445	26-30	481-485	26-30	38.1-40	30	3.10-3.12	25
531-535	32-40	556-560	32-40	381-385	32-40	446-450	32-40	486-490	32-40	36.1-38	40	3.07-3.09	30
536-540	42-50	561-565	42-50	386-390	42-50	451-455	42-50	491-495	42-50	34.1-36	50	3.04-3.06	40
541-545	52-60	566-570	52-60	391-395	52-60	456-460	52-60	496-500	52-60	32.1-34	60	3.01-3.03	50
546-550	62-70	571-575	62-70	396-400	62-70	461-465	62-70	501-505	62-70	30.1-32	70	2.98-3.00	60
551-555	72-80	576-580	72-80	401-405	72-80	466-470	72-80	506-510	72-80	28.1-30	80	2.95-2.97	70
556-560	82-90	581-585	82-90	406-410	82-90	471-475	82-90	511-515	82-90	26.1-28	90	2.92-2.94	80
561-565	92-100	586-590	92-100	411-415	92-100	476-480	92-100	516-520	92-100	≤ 26	100	2.89-2.91	90
> 565	100	> 590	100	> 415	100	> 480	100	> 520	100			< 2.89	100
SCORE		SCORE		SCORE		SCORE		SCORE		SCORE		SCORE	

Table 5: Ballistic Testing Scoring Grid

9 Pre-Award Sample Identification

9.1 Unique Identifier Label

The bidder must permanently place a label containing a Canadian-assigned alpha-numeric identifier on all SBAS (PAS) system components, ballistic shoot-packs and armour material packs delivered with the bid proposal.

The alpha-numeric identifier is unique to each bidder and can be requested from the Contracting Authority at any time after release of the RFP by any Bidder committing to submitting a bid proposal. At this time, the Contracting Authority will instruct the TA to provide a Bullet Resistant Plate (BRP) as Government Furnished Material (GFM) to support manufacturing of the pre award samples.

The identification of all items delivered as part of the bidder proposal with the unique alpha-numeric identifier allows for an un-biased assessment by ensuring that the bidder identification is unknown to everyone on the technical evaluation team.

The unique identifier label must conform to the sample illustrated in figure 7.

Bidder C3

Requisition Number W8476-165488

Warning: Test Article

This item is intended for testing. *It is **not** intended for personal use. It has **not** been demonstrated to have any ballistic resistance.*

Do Not Wear!

**** Wear Face ****

This side to be positioned against backing material.

Figure 7: Unique Identifier Label

9.2 Labels

The Identification Label that is applied to SBAS (PAS) components IAW TPD's (Annexes C-2 and C-3) **MUST NOT** contain the manufacturer name until after Contract Award. This is to ensure that the technical evaluation team does not know the identity of the manufacturer. The SBAS (PAS) components will be identifiable only by the unique identifier label applied IAW section 9.1 of Annexe D.

10 Proposal Submission

The bidder should assemble all information required to support his proposal in binder(s). The first binder should contain an index of all documents that are contained within the proposal. Documents within the proposal should be separated by sequential flags. Where multiple binders are required they should be numbered.

11 Summary of Bid Submission Deliverables

Table 6 summarizes all the items that must be submitted with a bidder's proposal. These deliverables will be used to support bid evaluation and they will become the property of DND. These items will not be returned to the bidder.

Bid Submission Deliverables	Quantity
SBAS (PAS) (Item 1 from Figure 1, less Item 8)	1 x SBAS size Medium Regular
Qualification Test Reports IAW Annex C-1 Section 6.8 and 7.10 for each test in Table 2 to Annex D	1 report per test
Miscellaneous Non-ballistic Fabric Certificates of Conformance (C of C) IAW Annex D Section 7.1.3.	1 C of C for every material
Carrier Material Test Reports IAW Annex D Section 7.1.2	1 report per test or C of C from material manufacturer
Spectral reflectance data per Annex C-2 Section 3.2.3.1.4 and Annex C-3 Section 3.3.3.1.4 and Annex D Section 7.1.1.	1 report per lot (MS Excel Format on USB stick)
Ballistic shoot packs per Annex C-1 Section 1.4.1.10 and Annex D Section 8.1.	16
Armour material pack per Annex C-1 Section 1.4.1.11 and Annex D Section 8.1.	10
C of C that states Ballistic shoot packs and Armour material packs are from the same lot as material used by bidder for qualification testing IAW Annex D section 8.1	1
Recommended Torso Lengths (Rear) per Annex C-2 Section 1.3.1.2. and Annex D Section 4.3.	1
Draft QA/Management Plan per Annex B Section 5.0 and Annex D Section 5.1.	1
Completed Technical Evaluation Workbook file.	1

Table 6: Bid Submission Deliverables

Appendixes

Appendix 1: Technical Evaluation Workbook