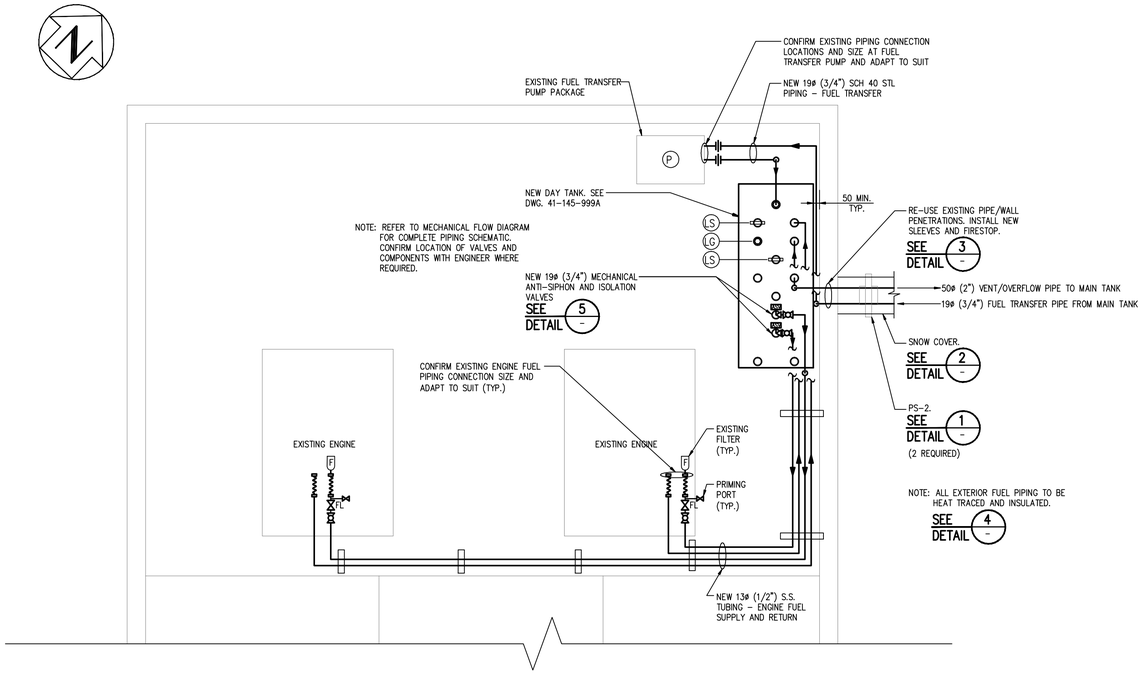

ENGINE ROOM PLAN

SCALE 1:25

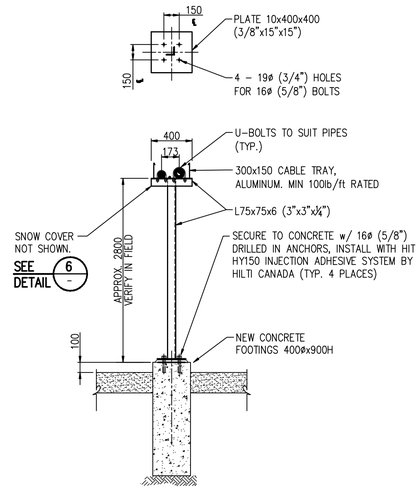

PIPE SUPPORT – DETAIL 1
PS-2

SCALE 1:30

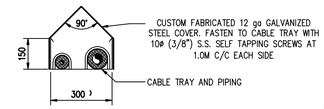

SNOW COVER – DETAIL 2

SCALE 1:15

PIPE/TUBING SUPPORT MAXIMUM SPACING (mm)		
NOMINAL PIPE SIZE (mm)	STL OR S.S. TUBING	STL OR S.S. SCH.40 OR SCH.80 PIPE
10ø (3/8")	1200	1800
13ø (1/2")	1200	1800
20ø (3/4")	1500	2100
25ø (1")	1800	2100
32 (1 1/4")	2100	2400
38ø (1 1/2")	2400	2700
50ø (2")	2400	3000

NOTE:
WHERE DIFFERENT SIZES OF PIPE/TUBING ARE RUN ALONG THE SAME ALIGNMENT, SUPPORT SPACING USED SHALL BE THAT FOR THE SMALLEST DIAMETER LINE.

LEGEND	
————	NEW
————	EXISTING

PIPING SYMBOLS	
	BALL VALVE
FL	FUSIBLE LINK VALVE
SO	SOLENOID VALVE
	FLEXIBLE CONNECTION
LSLL	TANK LOW LOW LEVEL (ALARM)

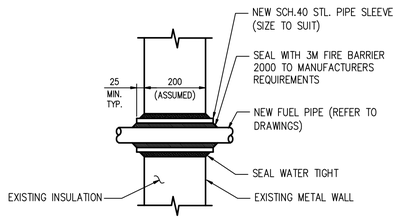

TYPICAL PIPE SLEEVE

DETAIL 3

1:10

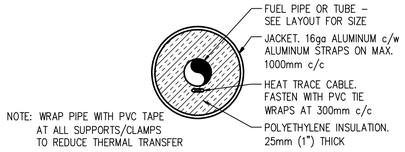

HEAT TRACE AND INSULATION – DETAIL 4

N.T.S.

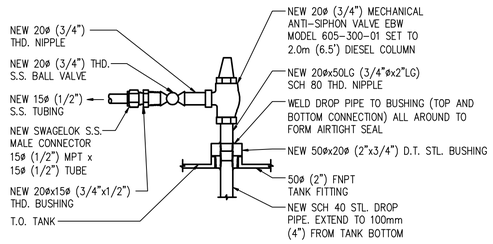

GENERATOR FUEL SUPPLY TANK CONNECTION – DETAIL 5

N.T.S.

MECHANICAL NOTES:

1. ALL DIMENSIONS TO BE FIELD CHECKED PRIOR TO PIPING FABRICATION AND INSTALLATION
2. DIMENSIONS TO BE FIELD DETERMINED. MOUNT TUBING TO WALL WITH UNISTRUT AND P-CLAMPS.

MORROW PROJECT #41-145

Morrow Engineering Ltd.
CONSULTING ENGINEERS NORTH VANCOUVER, B.C.

FISHERIES AND OCEANS CANADA
HABITAT AND ENHANCEMENT BRANCH

DWG. NO.	REFERENCE DRAWINGS	NOTES	

NO.	DATE	REVISIONS
1	13-08-07	RE-ISSUED FOR TENDERING
0	12-11-26	ISSUED FOR TENDERING
P2	12-10-22	RE-ISSUED FOR CLIENT REVIEW
P1	12-10-03	ISSUED FOR CLIENT REVIEW

DESIGNED B.H.
DRAWN D.C.
CHECKED B.H.
RECOMMENDED
APPROVED
APPROVED

PINKUT CREEK SPAWNING CHANNEL
FUEL SYSTEM UPGRADES
PUMPHOUSE AREA
MECHANICAL DETAILS

SCALE AS NOTED
DATE 10.08.04
DRAWING NUMBER 21-18-M25
REVISION 1